LBNL laser development for accelerators and light sources

Russell B. Wilcox

ORNL Laser Stripping Workshop

February 18, 2009

Outline

- High average power Ti:sapphire at ALS
- Femtosecond synchronization at LCLS
- H- stripping concepts

- I'll describe my projects here, but there are many others at LBNL, including
  - Laser wakefield acceleration (W. Leemans)
  - Photoinjectors for accelerators (H. Padmore)
  - Ultrafast science (R. Kaindl)
  - High harmonic generation (O. Gessner)

Femtosecond electron “slicing” at ALS

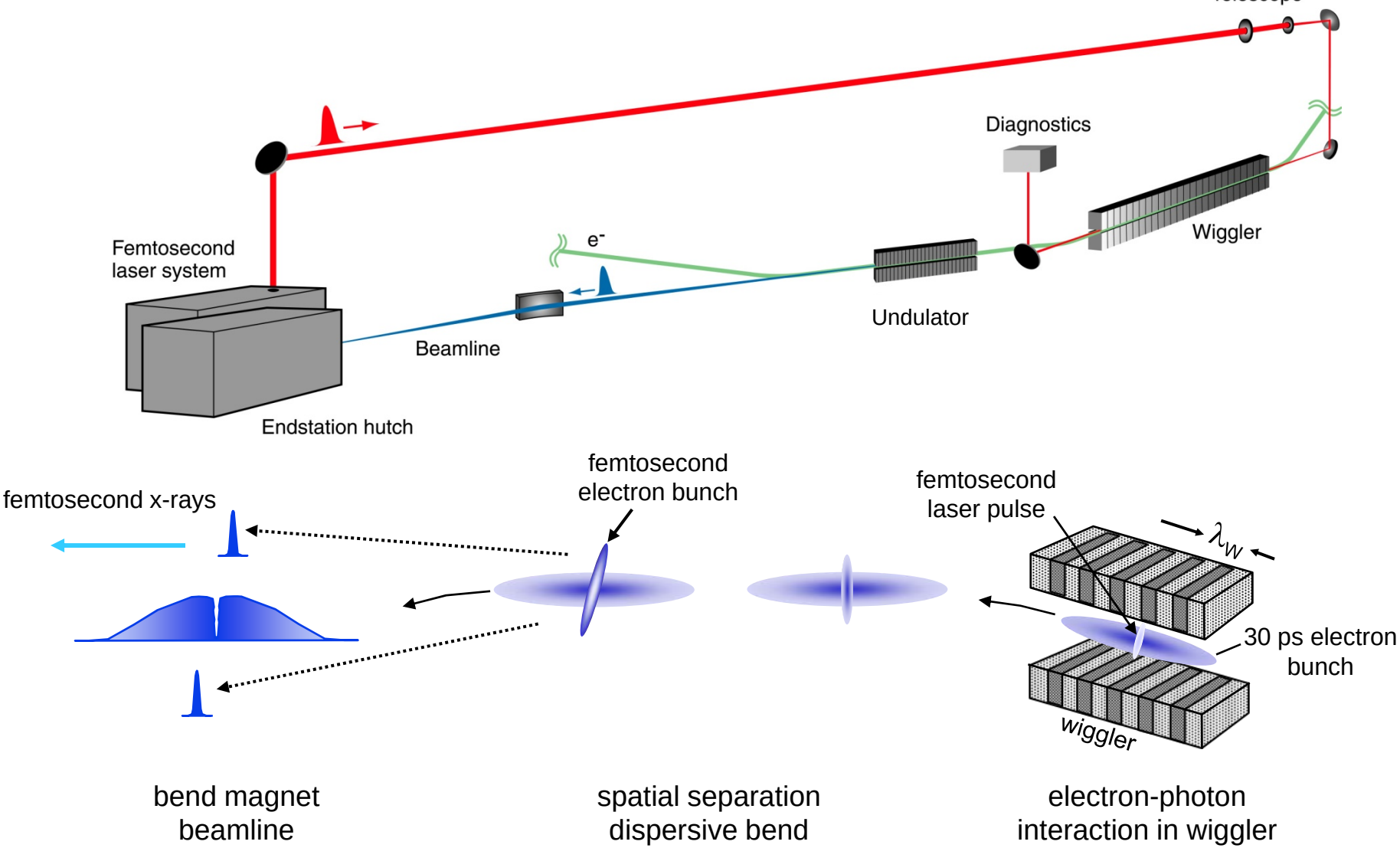

High power tisaf laser system

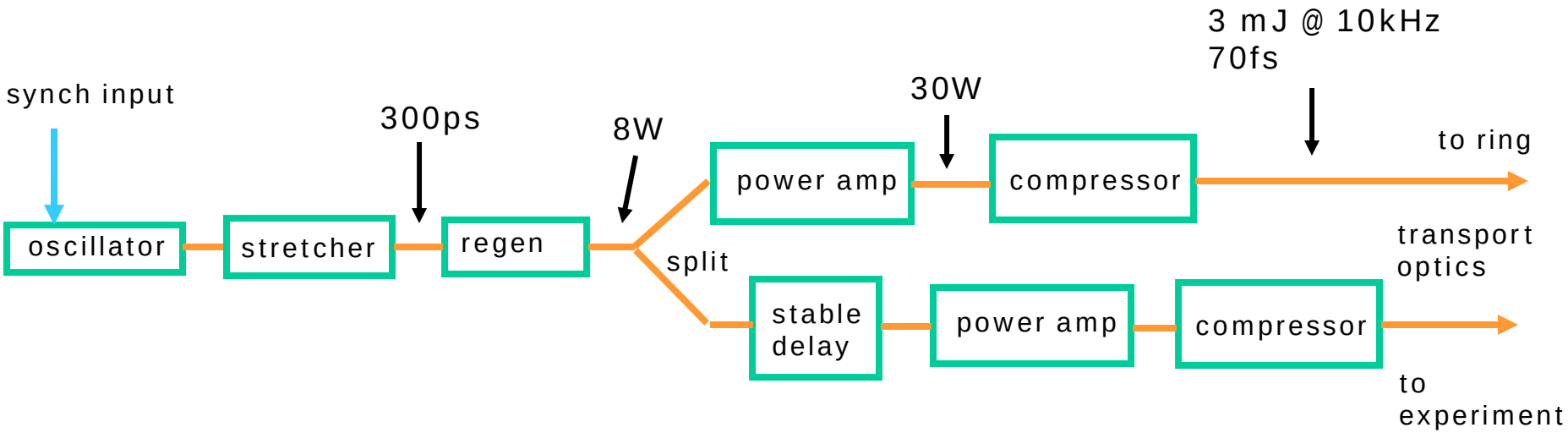

- Signals from both arms are synchronized to enable pump/probe experiments
- The system is synchronized with the electron storage ring by synching the oscillator in a PLL
  - Electron bunches arrive at 500MHz

Component layout on tables

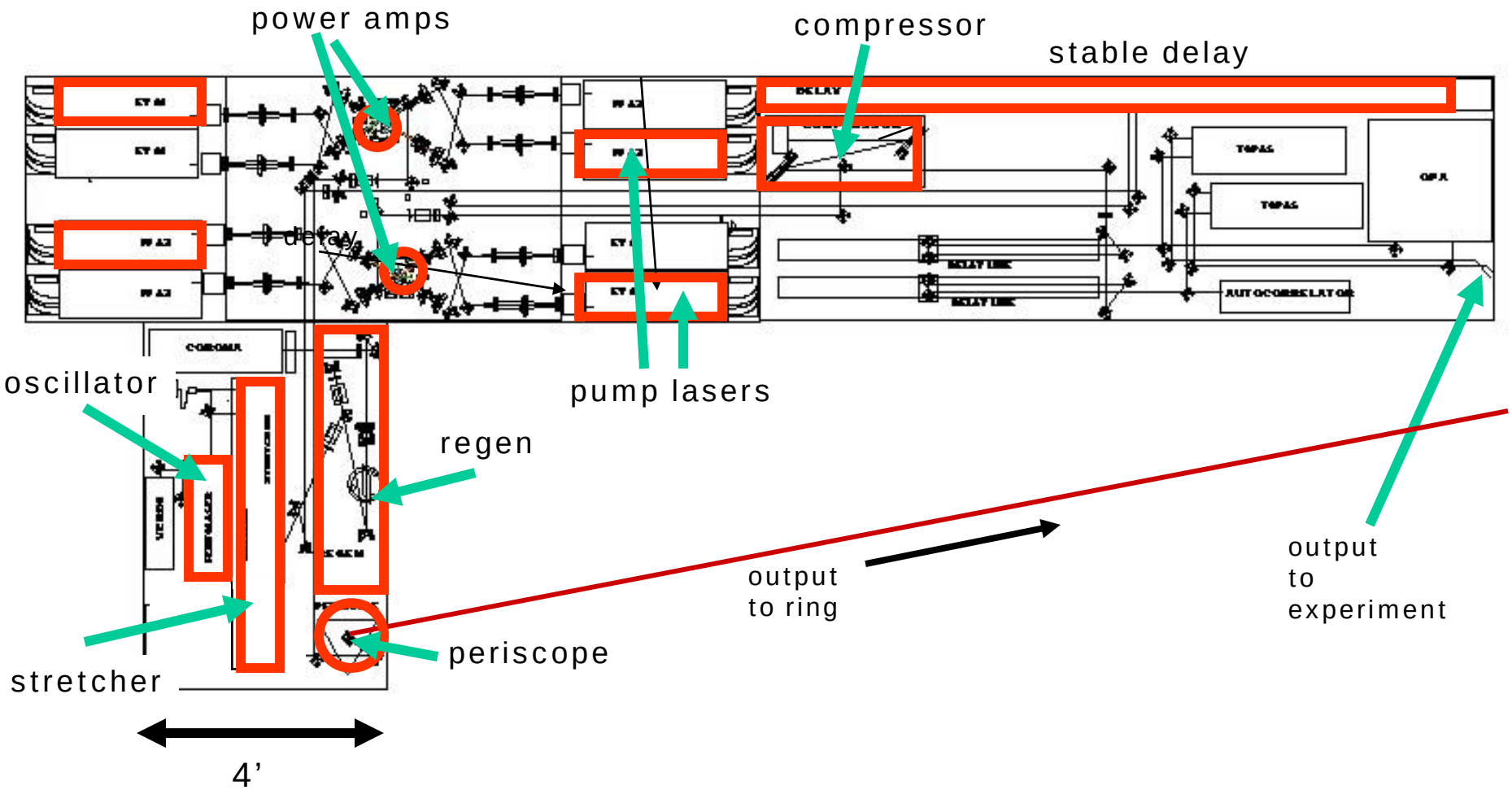

8-Watt regenerative amplifier

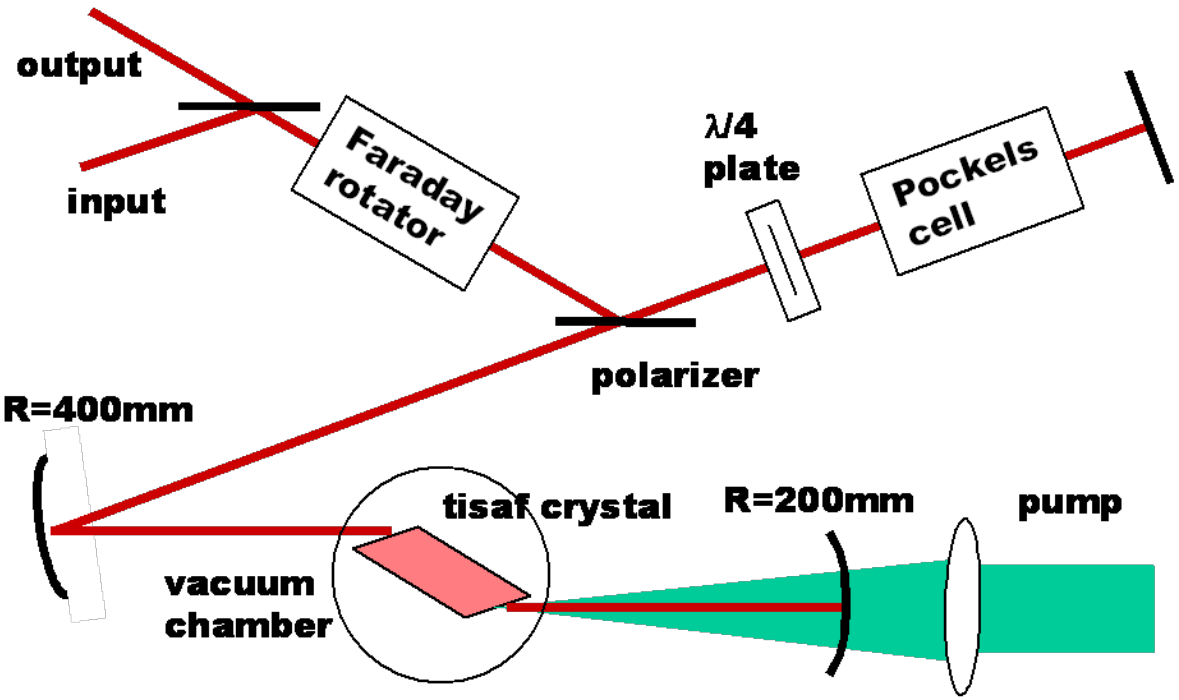

last pulses before switchout:

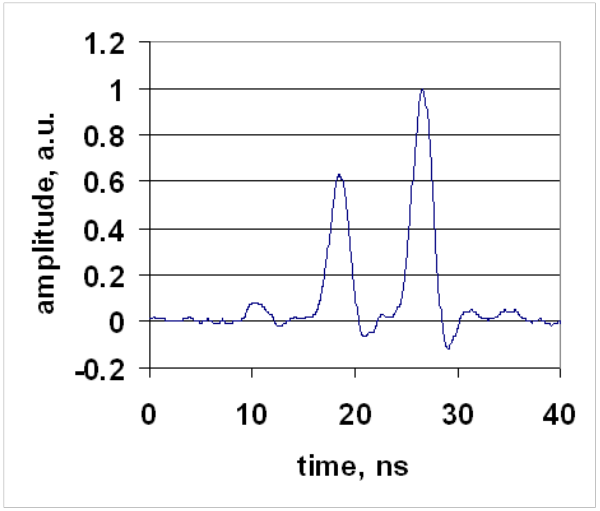

- Astigmatism in crystal is compensated by tilted curved mirror
- Pockels cell is BBO, to minimize piezoelectric ringing
- Crystal is cooled to ~60 K, when pumped by 60W (3mJ, 20kHz)
  - 90W cooler
- Output 8W at 20kHz, after 5 round trips (13% optical efficiency)
- Small signal gain ~20 per roundtrip

Cryo cooled double pass power amp

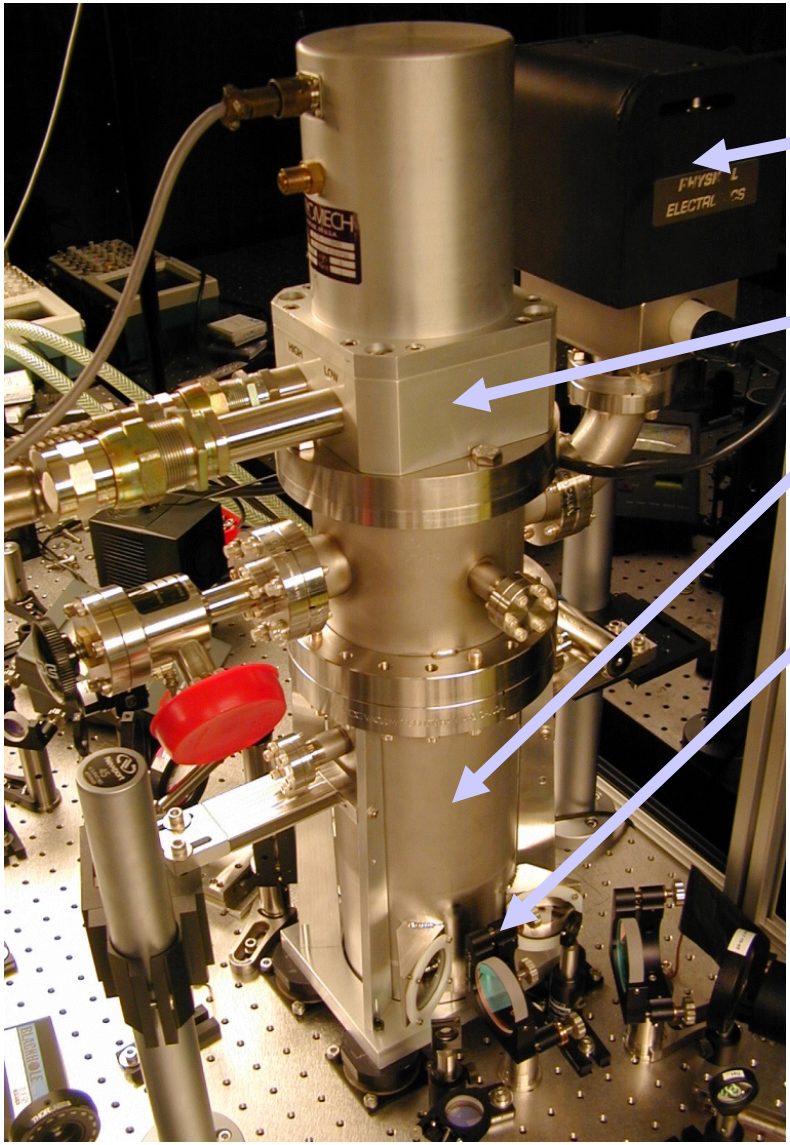

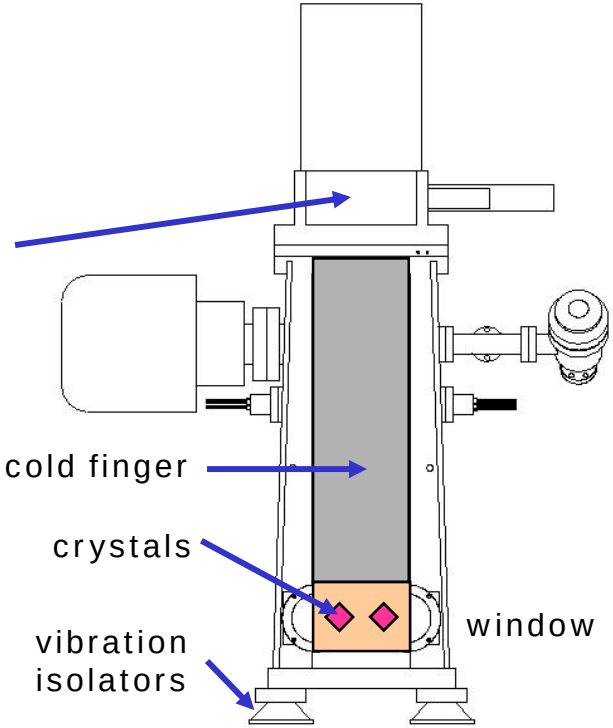

- 300W cryo cooler
- ~130 K when pumped with 180W
- Vacuum is $1.5*10^{-7}$ Torr with cryo off, $6*10^{-9}$ Torr when on
- Chamber moves vertically with cryo on, isolated from table

Double pass amp layout and results

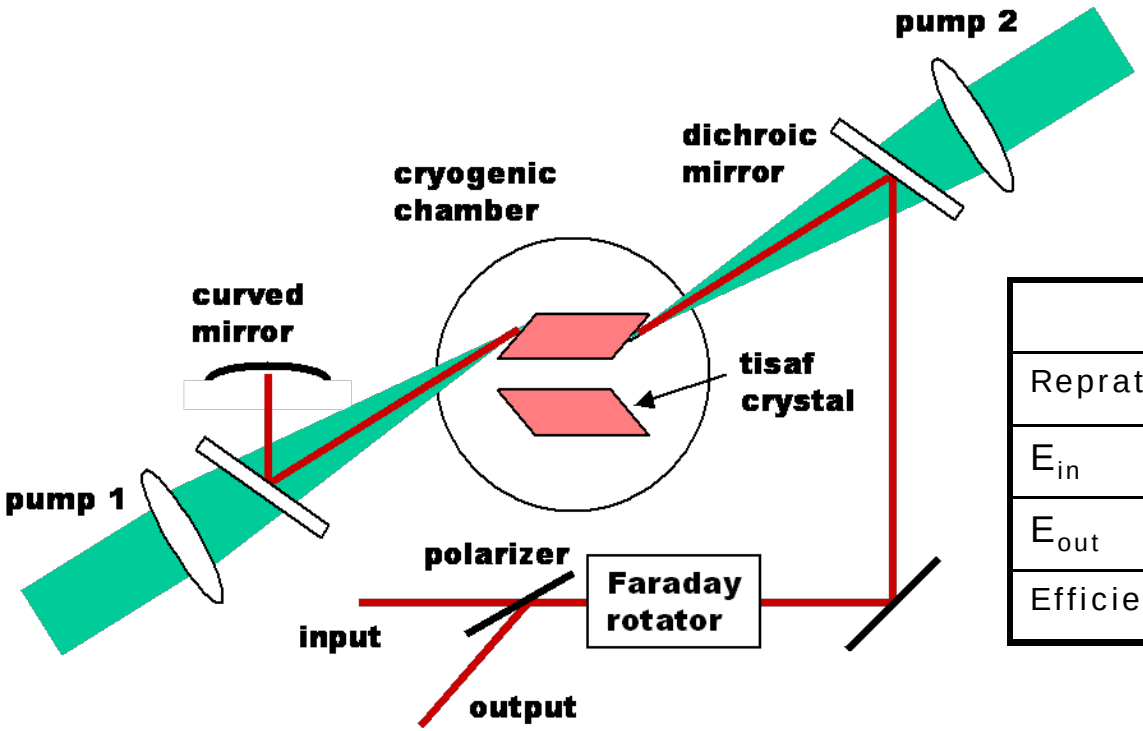

	One pump	Two pumps
Reprate	10kHz	10kHz
E_{in}	0.4mJ	0.4mJ
E_{out}	2mJ	3mJ
Efficiency	22%	16%

- Pumps are 90W, 10kHz
- Pump beam is Gaussian, focused to about the same size as signal
  - ~300 microns $1/e^2$ radius (calculated)
- Overall output energy instability < 5% peak-to-peak
- Two crystal chamber enables upgrade to 40kHz

Calculated thermal distribution in the pumped crystal

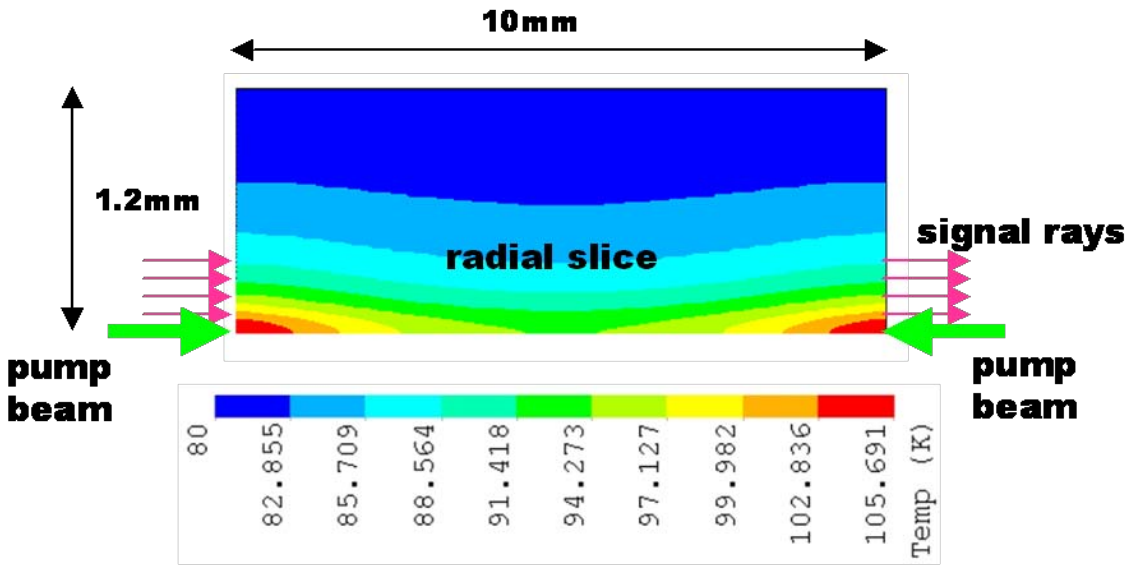

Example:
2 x 90W = 180W
Temperature 130 K
Focal length ~6m

$$f = \frac{\pi K_c \varpi_p^2}{P_{ph}(dn/dT)}$$

Appl. Phys. Lett. 56, 1831 (1990)

- ANSYS finite element calculation with realistic thermal input
- Temperature-dependent thermo-optic coefficient from literature (one average value used)
- Computed focal length was within 2x of analytic calculation
  - Thermal lens is weak compared with system lenses
  - Makes 0.1% effect on calculated beam parameters

Gain saturation measurement and fit

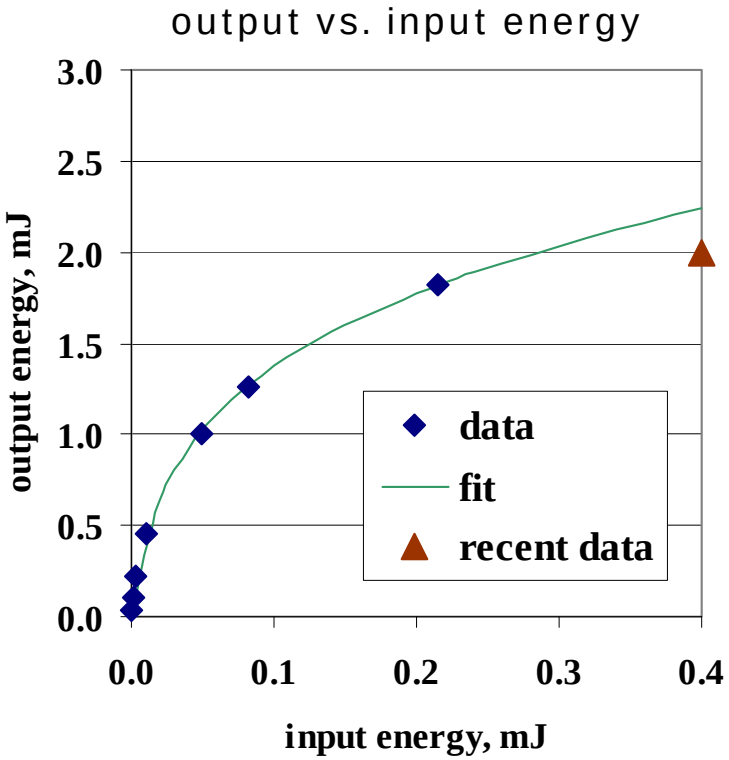

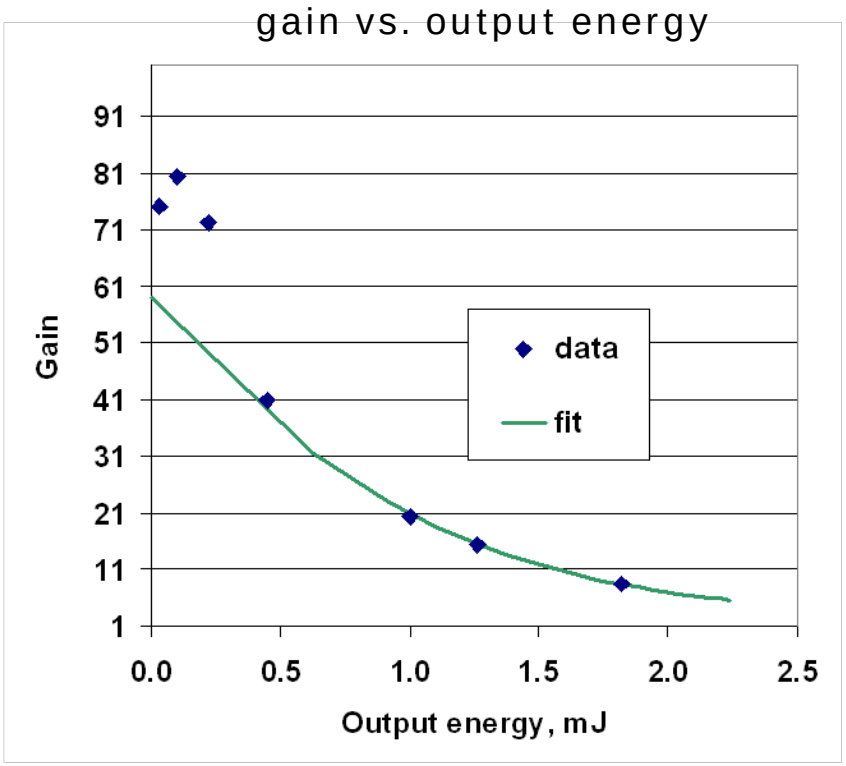

- One-dimensional saturation model, fit to measurement
  - Small signal gain and spot size are fit parameters
  - Model is used to optimize system performance
- In this case, one pump at 9mJ
- At 2mJ out, fluence is ~2.3 times saturation, at 250mm radius (compared to ~300mm from optical design)

Compact, transmission grating-based pulse compressor

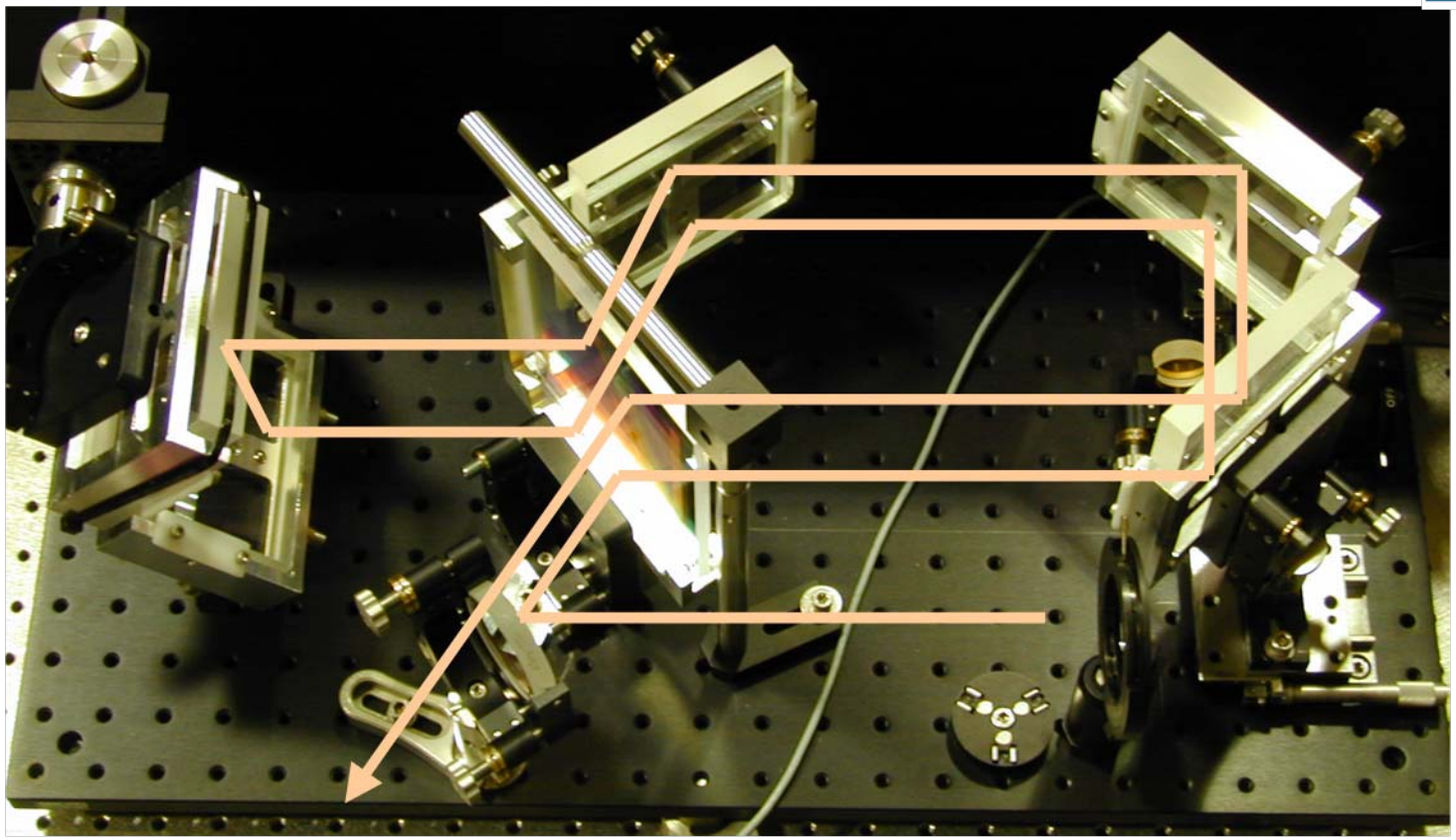

- 6mm quartz substrate grating, etched on one side, AR on the other
- Solves thermal phase distortion problem with metallic gratings
- >75% overall efficiency

Passively stabilized delay cell

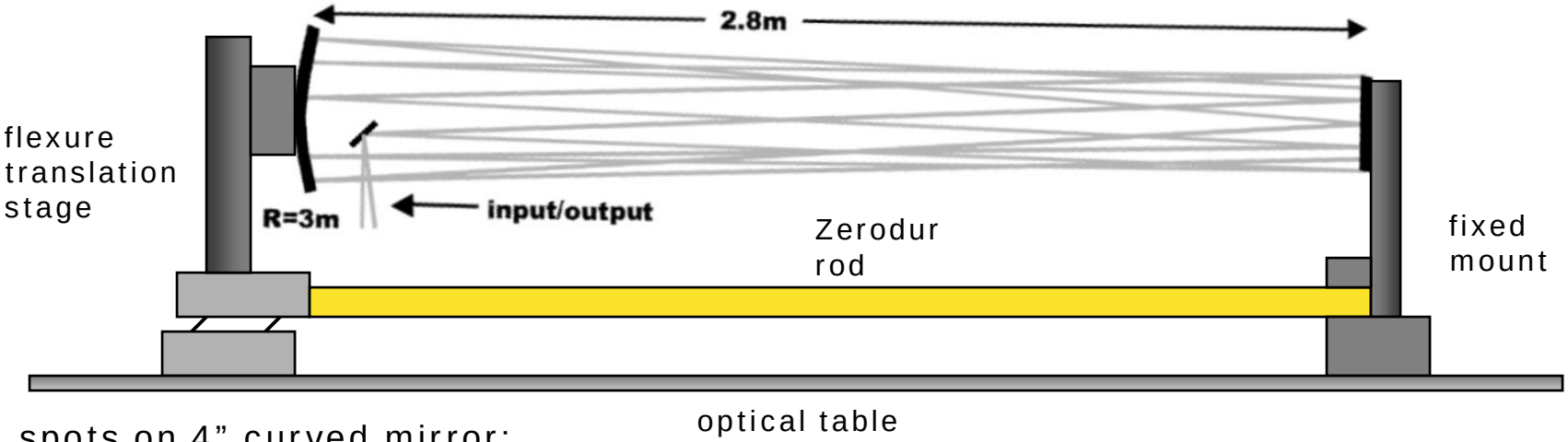

spots on 4” curved mirror:

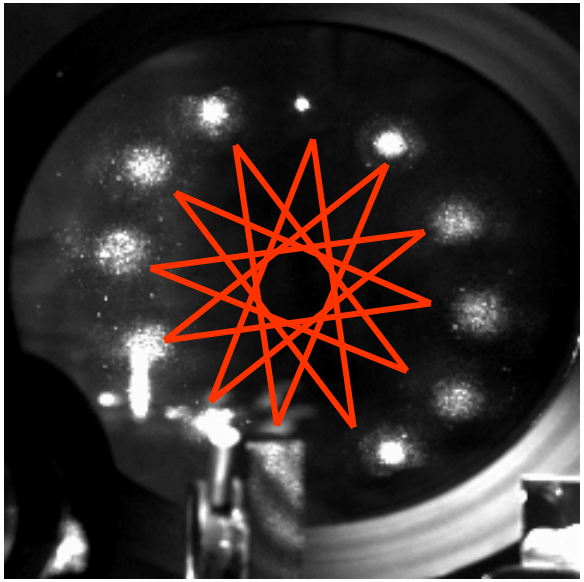

- Herriot delay cell designed so that input/output beam parameters are the same
  - 12 roundtrips
- Beams separated in angle are picked off far from the cell
- Low thermal expansion rod maintains constant delay as table expands

Our RF transmisson system will provide timing for two different FELs

LCLS:

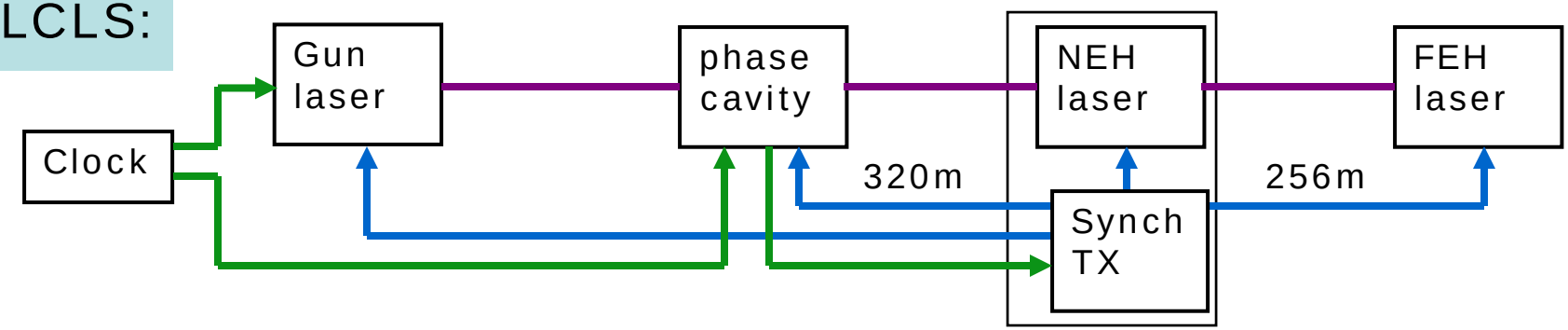

Fermi:

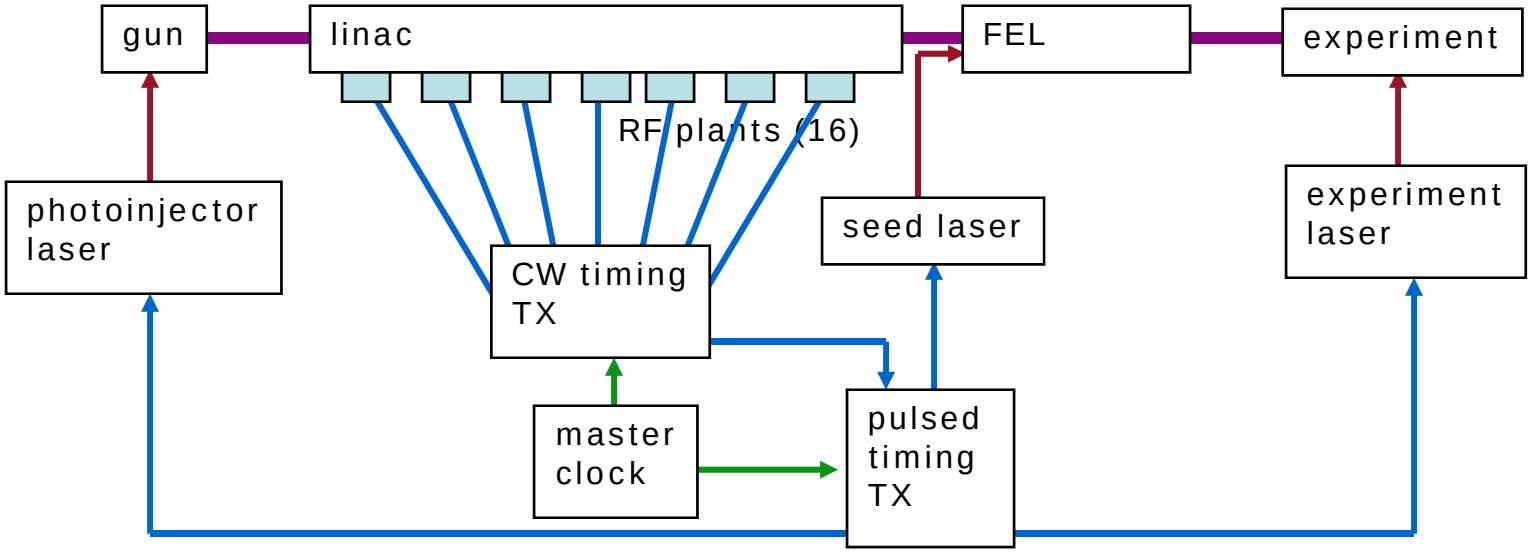

We can synchronize lasers with low jitter using RF

- We stabilized two lasers at 100MHz and 2200MHz
- Our decision to use 2856MHz is based on this result
- Typical scheme, but higher frequency than commercial lock electronics (~500MHz)

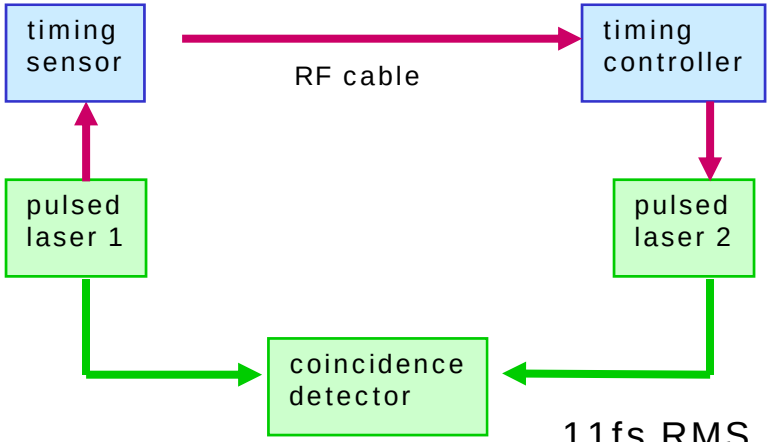

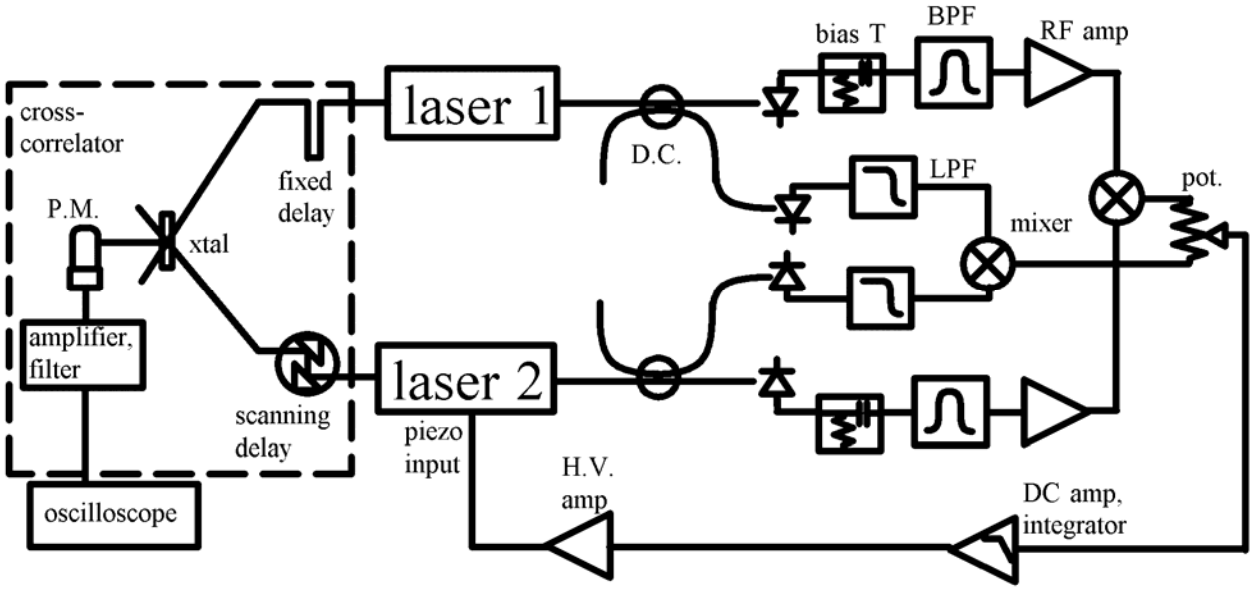

11fs RMS, 1kHz-1.25MHz

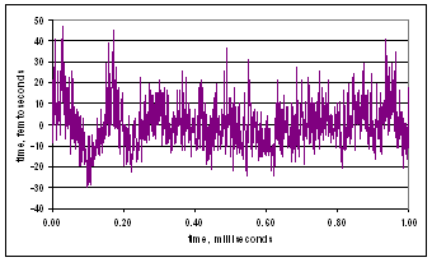

12fs RMS, 4 seconds

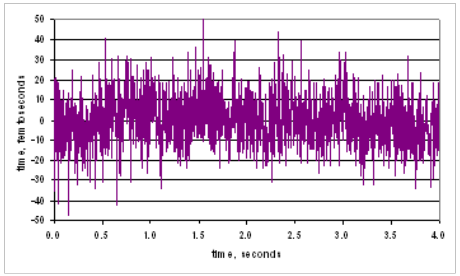

An optical interference scheme synchronizes lasers to <6fs

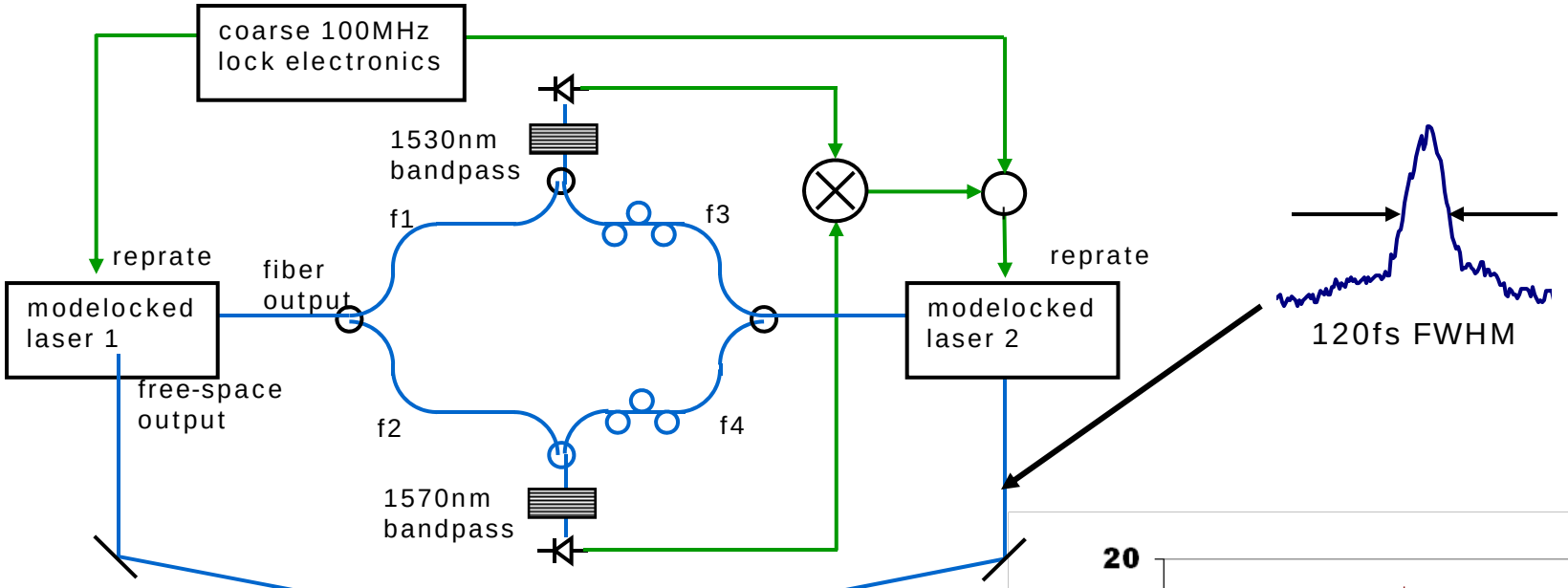

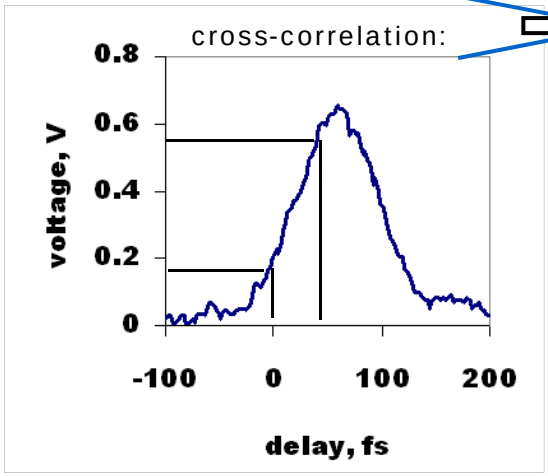

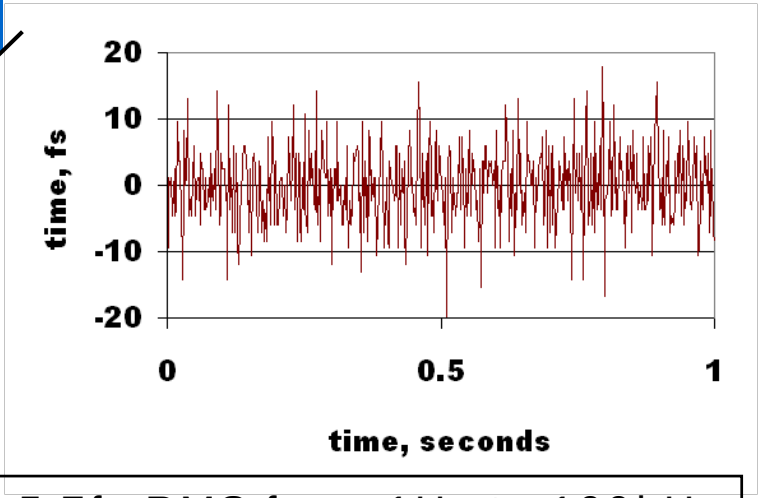

5.7fs RMS from 1Hz to 100kHz

Multiple factors must be controlled to ensure long term temporal stability

1. High stability laser frequency lock to atomic absorption line
2. Low noise amplitude modulation
3. Interferometric line stabilization scheme
4. Temperature and humidity controlled fan-out and reference line
5. Diodes operated to minimize amplitude-to-phase conversion
6. Low noise detection of RF phase
7. Feedforward correction for thermal coefficient of dispersion

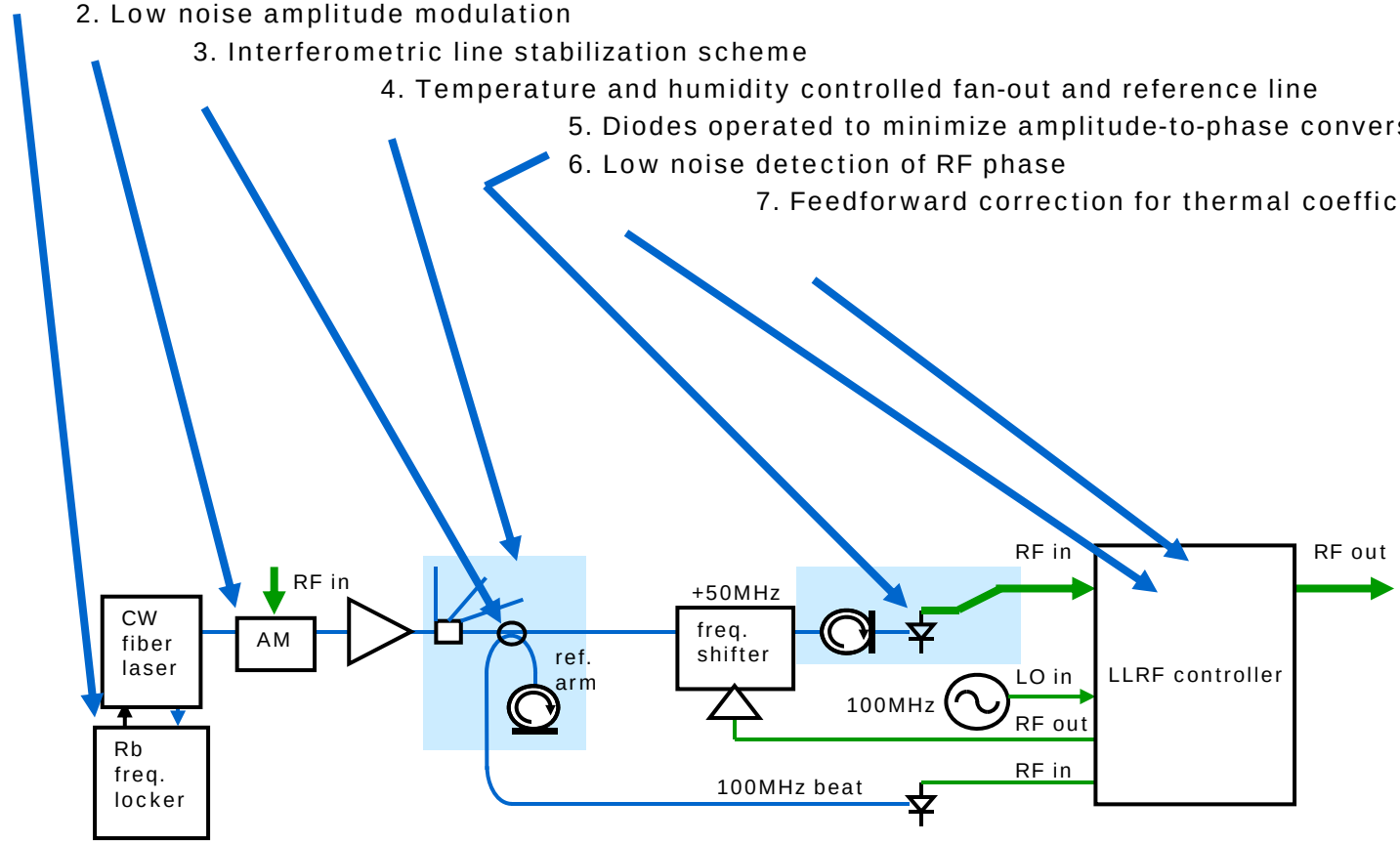

Our RF transmission scheme eliminates mechanical delays for better reliability

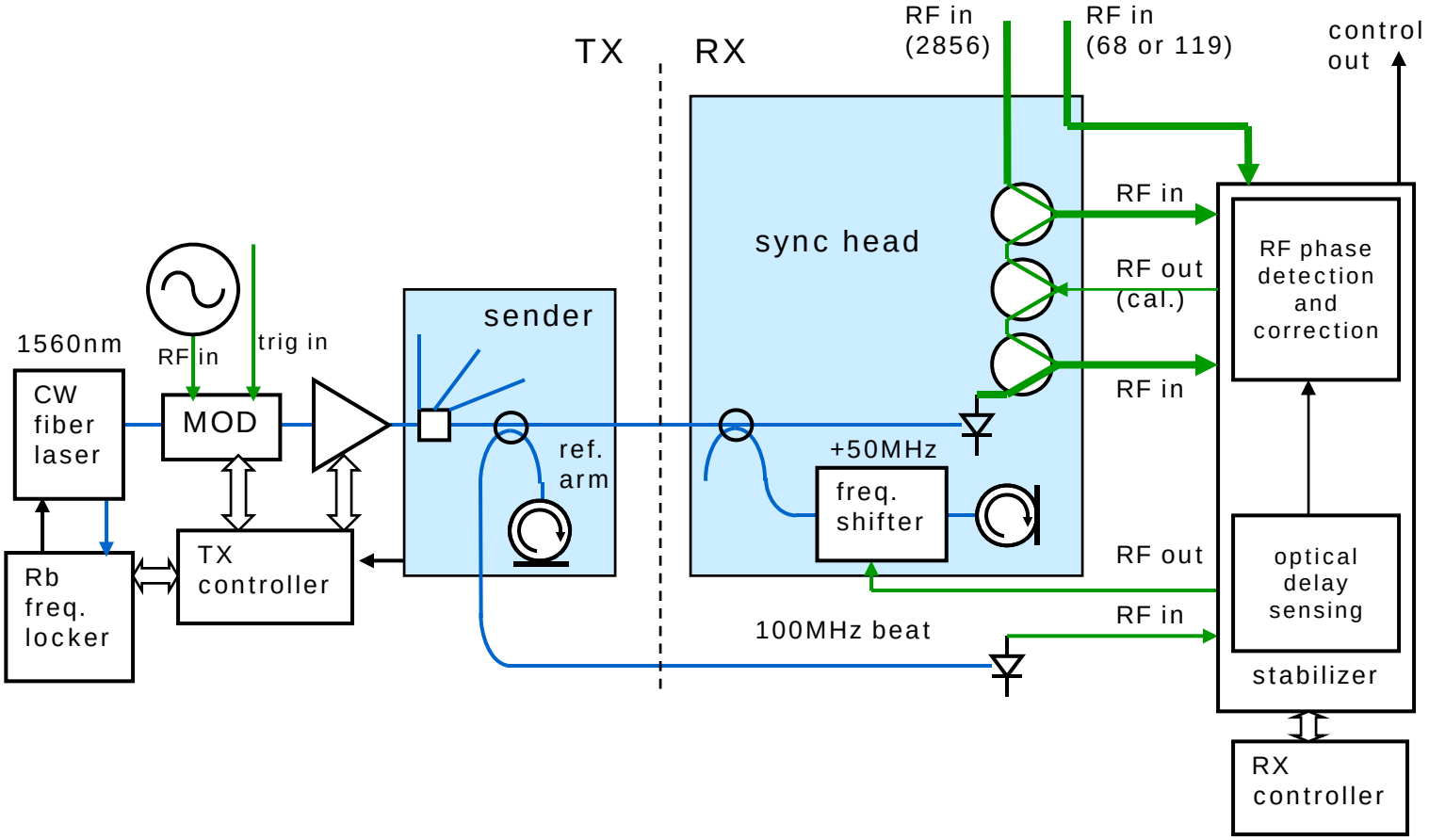

A dual channel interferometer was used to measure perturbations in situ

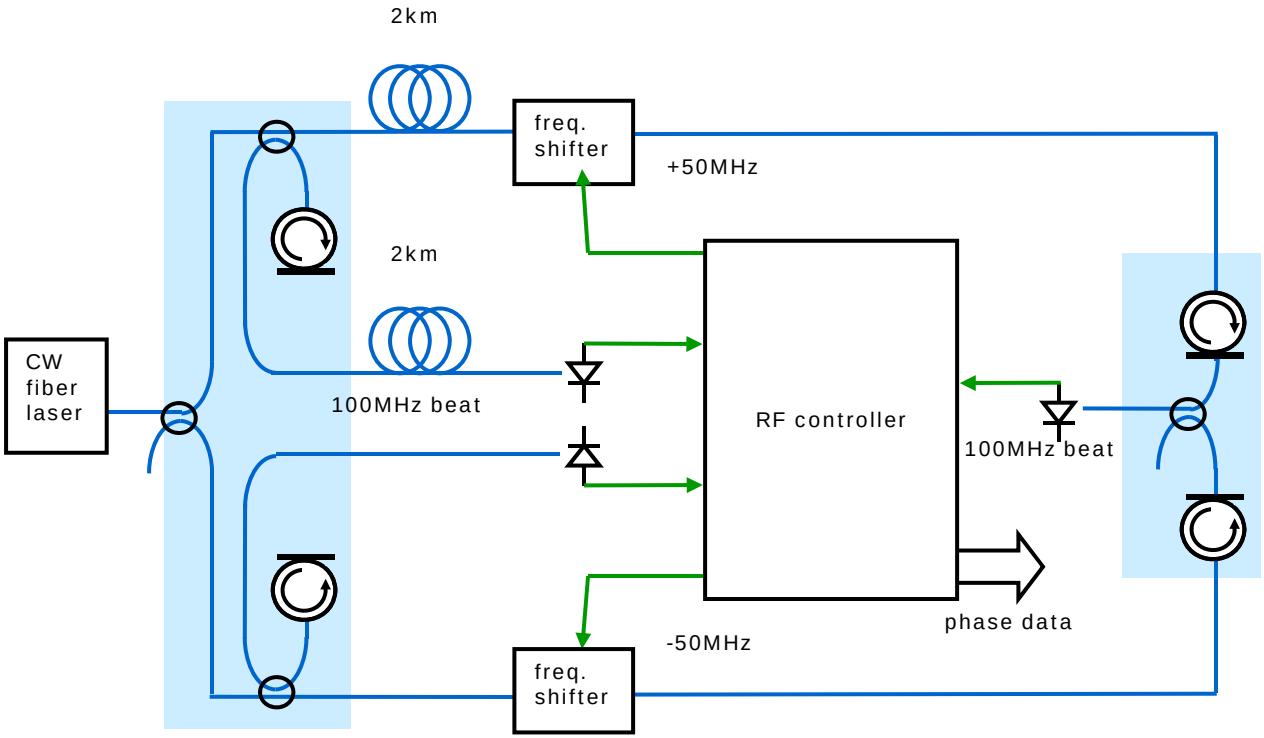

- Made of two single channel Michelsons in a Mach-Zehnder configuration
- The heterodyne Michelson interferometer is the backbone of the synch system
  - Robust, precise, thoroughly tested
  - Our unique configuration has advantages over typical designs

We packaged a dual-channel interferometer for tests at SLAC

- Tunnel fiber was two 2.8km long loops
- Fiber was plain network cable, 12 strand, run in open cable conduit
- Goal was to demonstrate this location is OK, since it is cheaper to install here

Interferometer measurements were stable to 6 waves over 10 days

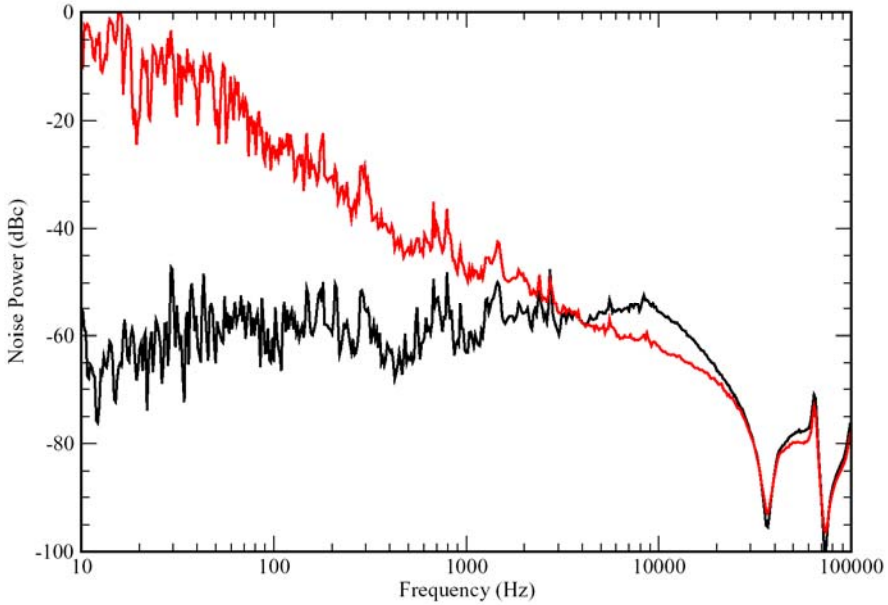

Short term, 10Hz to 40MHz
0.25fs RMS with loop closed

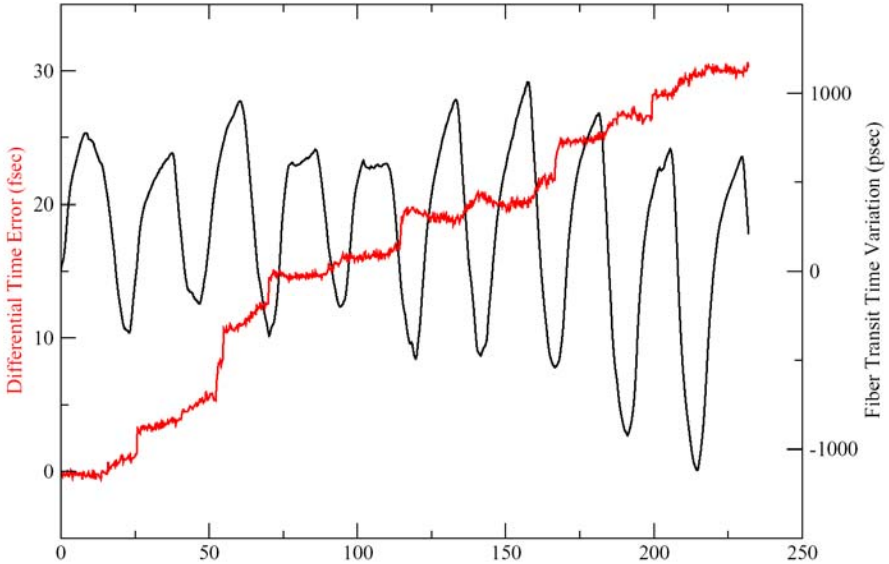

10 day run, about 6 optical waves
The slope was found to be a computation artifact, so actual drift is less

We stabilize a single frequency laser to ~5x10^{-10} using saturated absorption

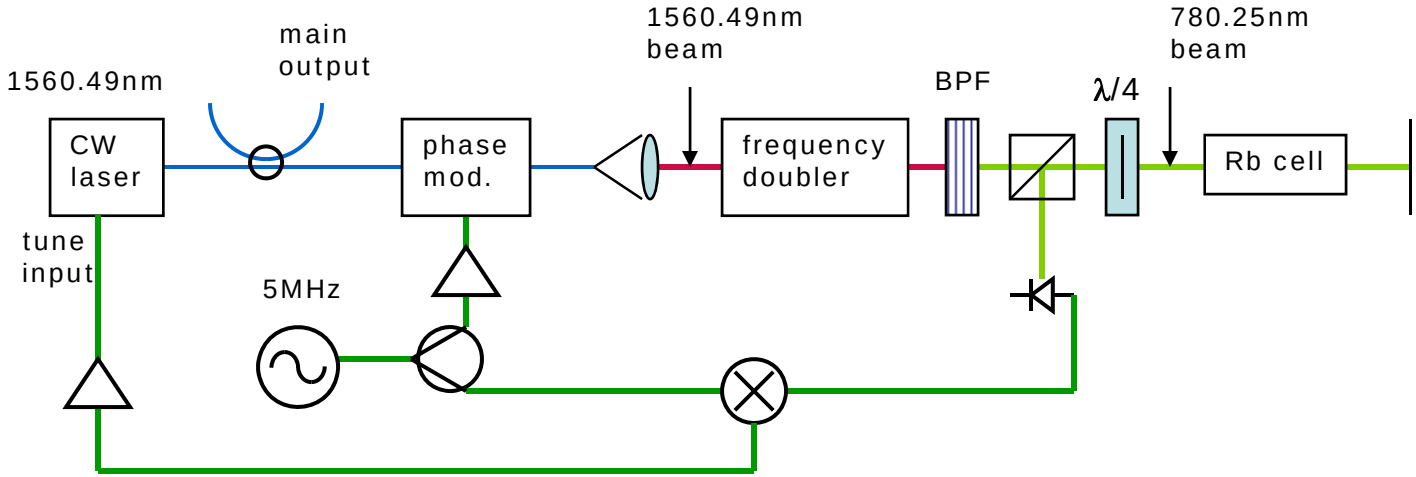

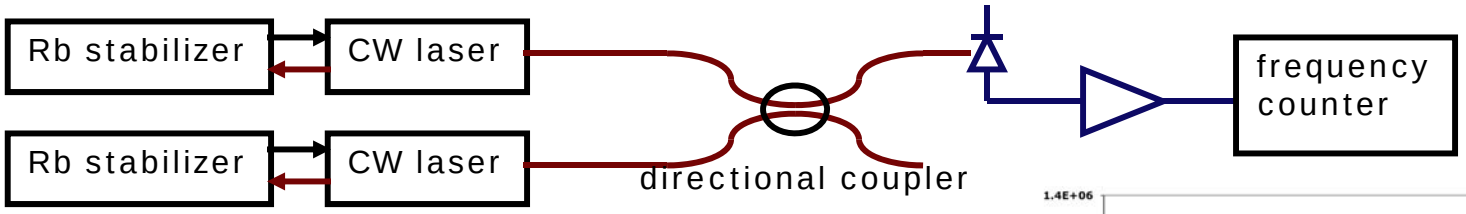

- Need 10^{-9} for 2km link, 10fs uncertainty
- RMS, long term: 5.0e-10
- RMS, short term: 2.0e-10
- P-P variation: 3.2e-9

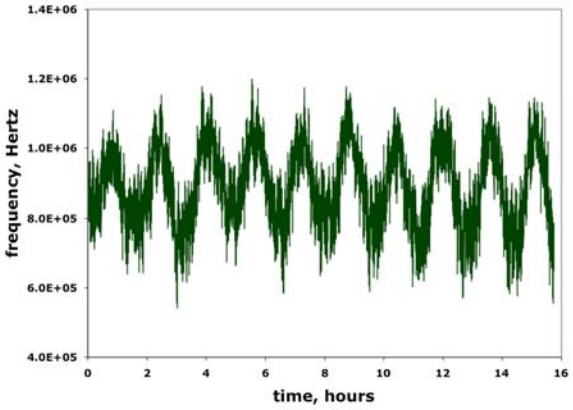

Operating signal levels are adjusted to minimize phase error

– As average optical power to diode is varied, phase of detected RF shifts

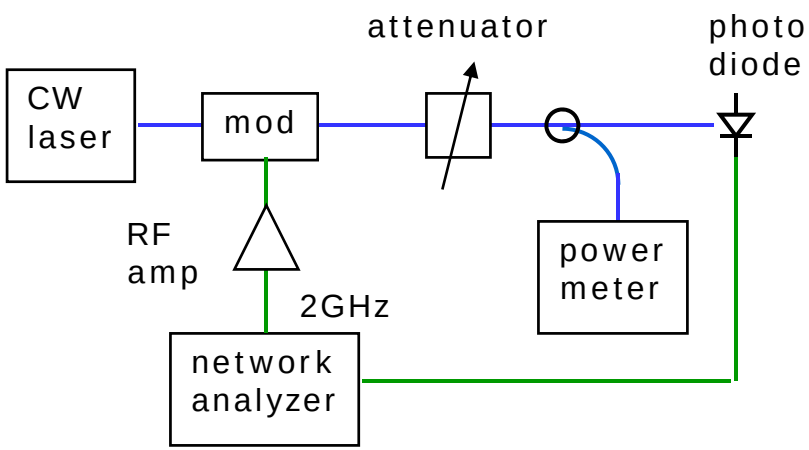

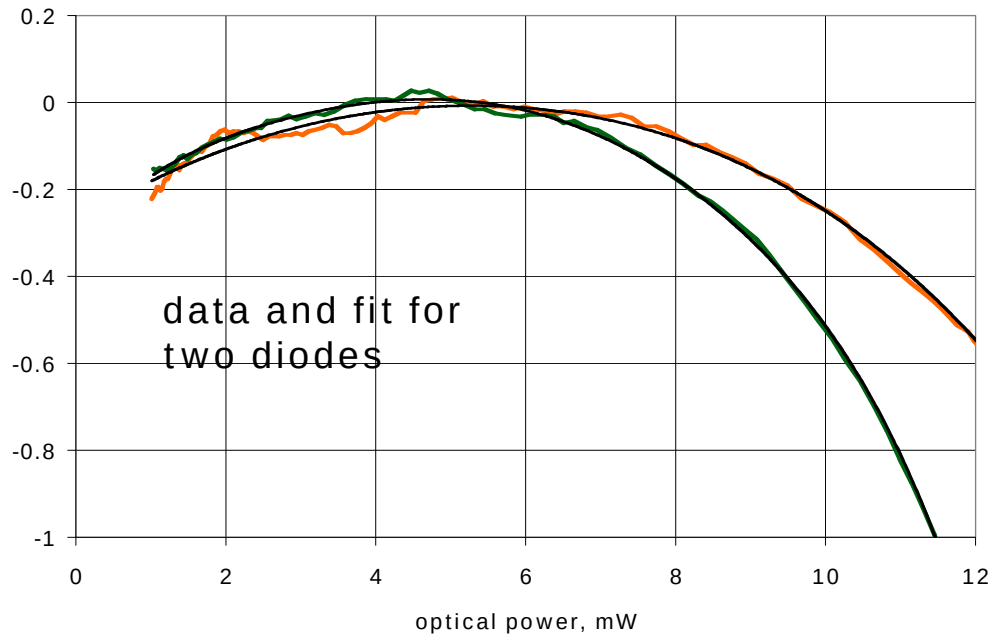

- Peak in AM/PM curve provides “zero-slope” operating point
  - +/- 10% in power produces <10fs timing shift
  - Power can be regulated to <10% by modulating amplitude of RF to frequency shifter, feeding back on average photocurrent

The feed-forward scheme suppresses short term perturbation

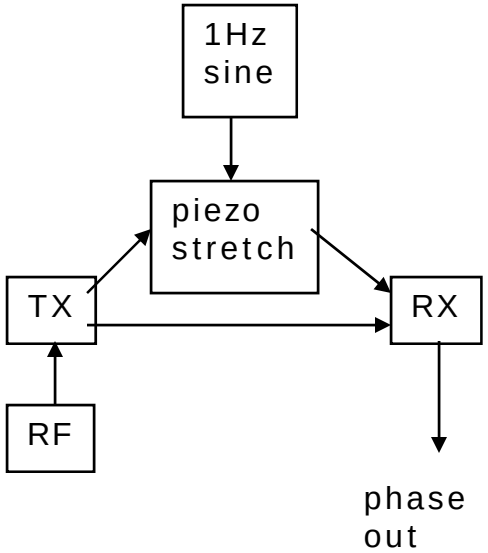

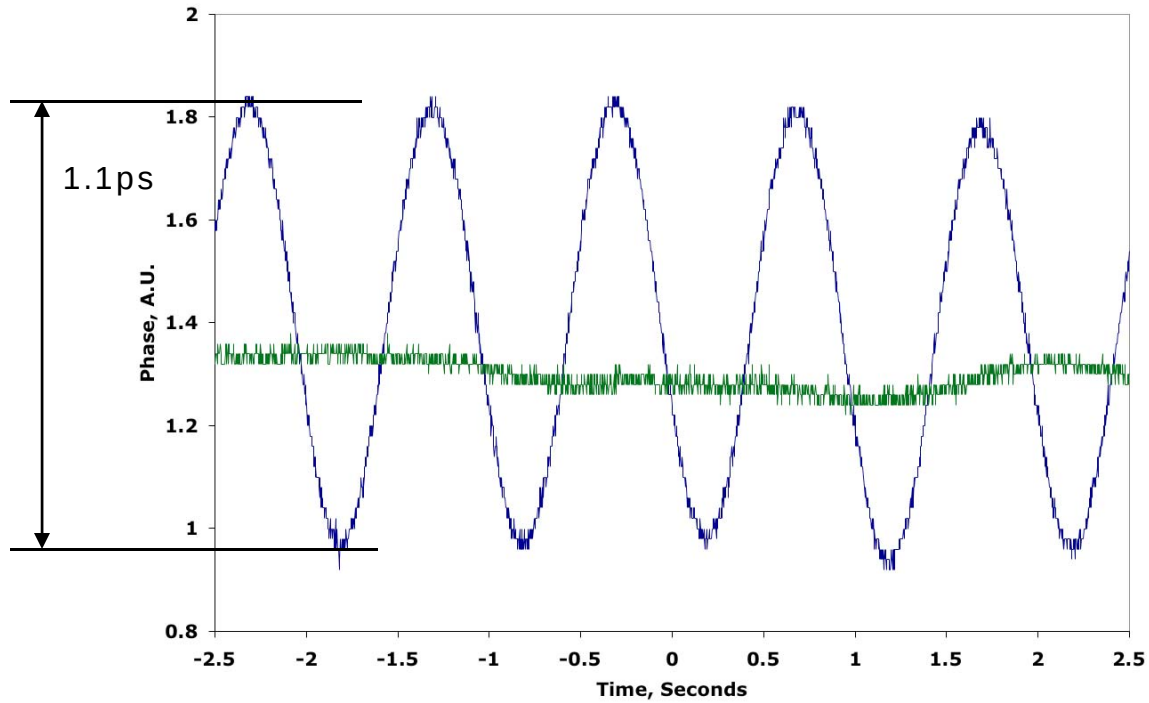

- We perturbed one fiber path with a ~1ps, 1Hz signal, and observed the relative phase between the two channels
- We could null the effect of this perturbation by adjusting one factor, with perturbations from other effects remaining
- This proves the “measure and feed forward” scheme

We have demonstrated sub-100fs RF synch over 2km and 200m

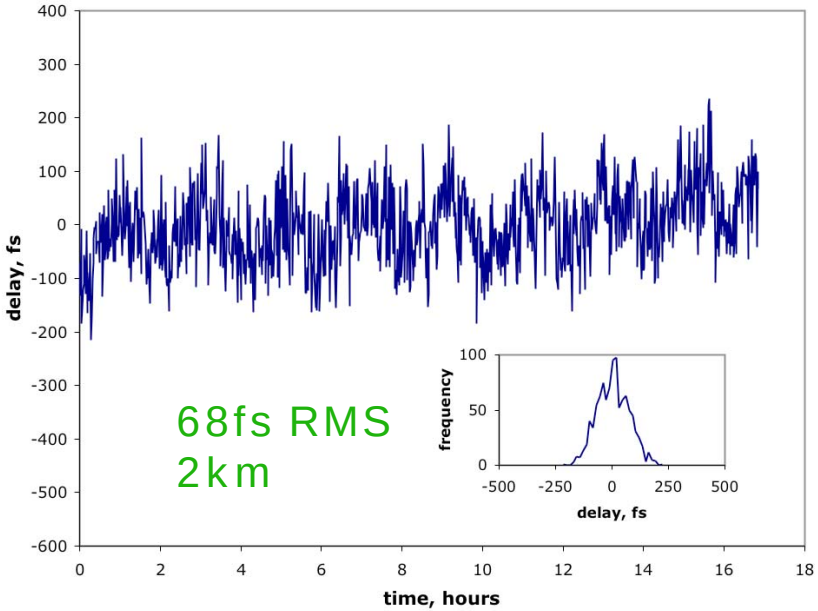

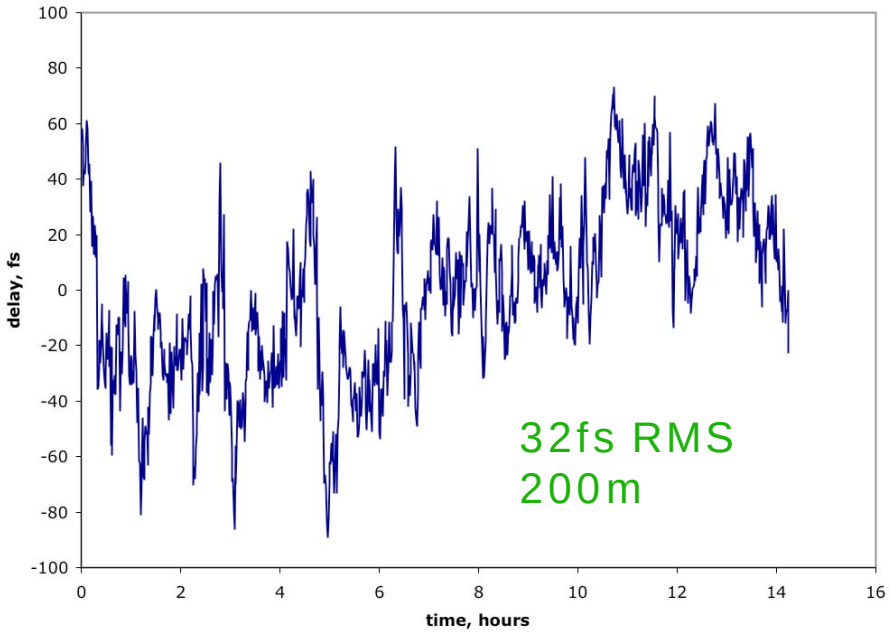

- 2km fiber is LAN fiber around lab site
- 200m fiber is strung around lab walls

IR vs UV

- Calculations say IR can be used, but with high magnetic field to strip excited H-
  - To make magnet easier, focus is on UV laser
- Why push for IR:
  - Cheaper, more efficient laser (accompanied by reliability and stability)
  - Easier to maintain phase front quality in resonator, transport optics
  - Lower absorption in resonator mirrors (better finesse and thermal)
  - Less optics damage than from UV
  - Easier to actively maintain resonance condition
  - No “cracking” of hydrocarbons to contaminate mirrors with carbon
- Downside: high field in subsequent magnet
  - Is this worse than the above headaches?
    - Whole system has to be evaluated to optimize

Overall technical approach

- Assume 1064nm for stripping, higher magnetic field strip after
  - 45 degree incidence, focused beam for Doppler divergence
- Reduce the laser to a well-established commercial technology
  - About 200W average during a ~1ms pulse, input to cavity
  - High power diode-pumped Nd:YAG amps
  - Stable modelocked lasers with clock synchronization
- The wavelength happens to fit the application, for transverse excitation
- Reduce laser power by using a buildup cavity
  - 99.99% mirrors commercially available at 1064nm
  - Loss is probably transmission rather than absorption (less heating)
  - 4-mirror cavity to independently control focus, cavity length
  - Conservative 100x buildup factor
- Challenge is to reliably control the coupling to the cavity
  - Alignment of the laser through the transport system
  - Locking the cavity to the optical carrier
  - Control for thermal perturbations (active and passive)
  - Radiation damage to components

IR laser system

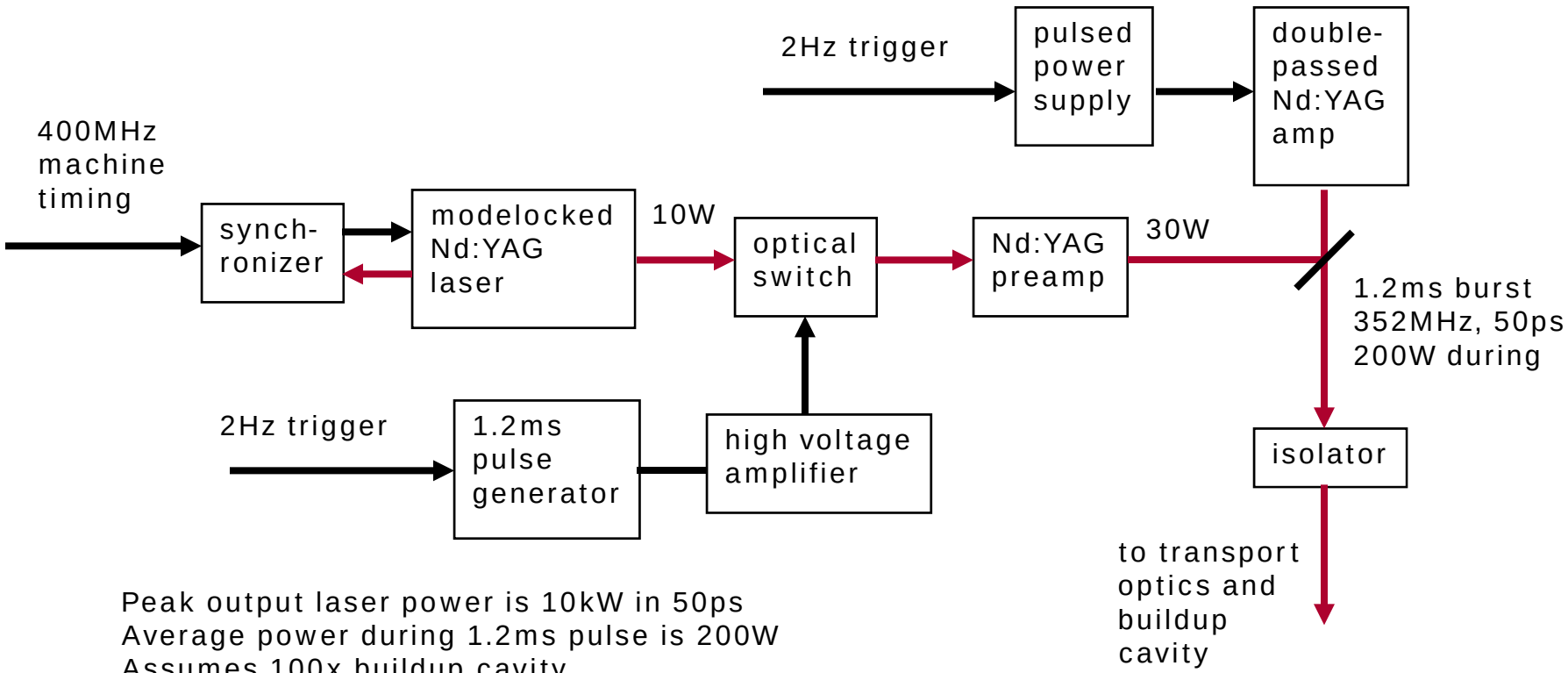

Peak output laser power is 10kW in 50ps
Average power during 1.2ms pulse is 200W
Assumes 100x buildup cavity
All components are commercially available
Lasers are diode-pumped for stability, reliability

Transport and cavity system

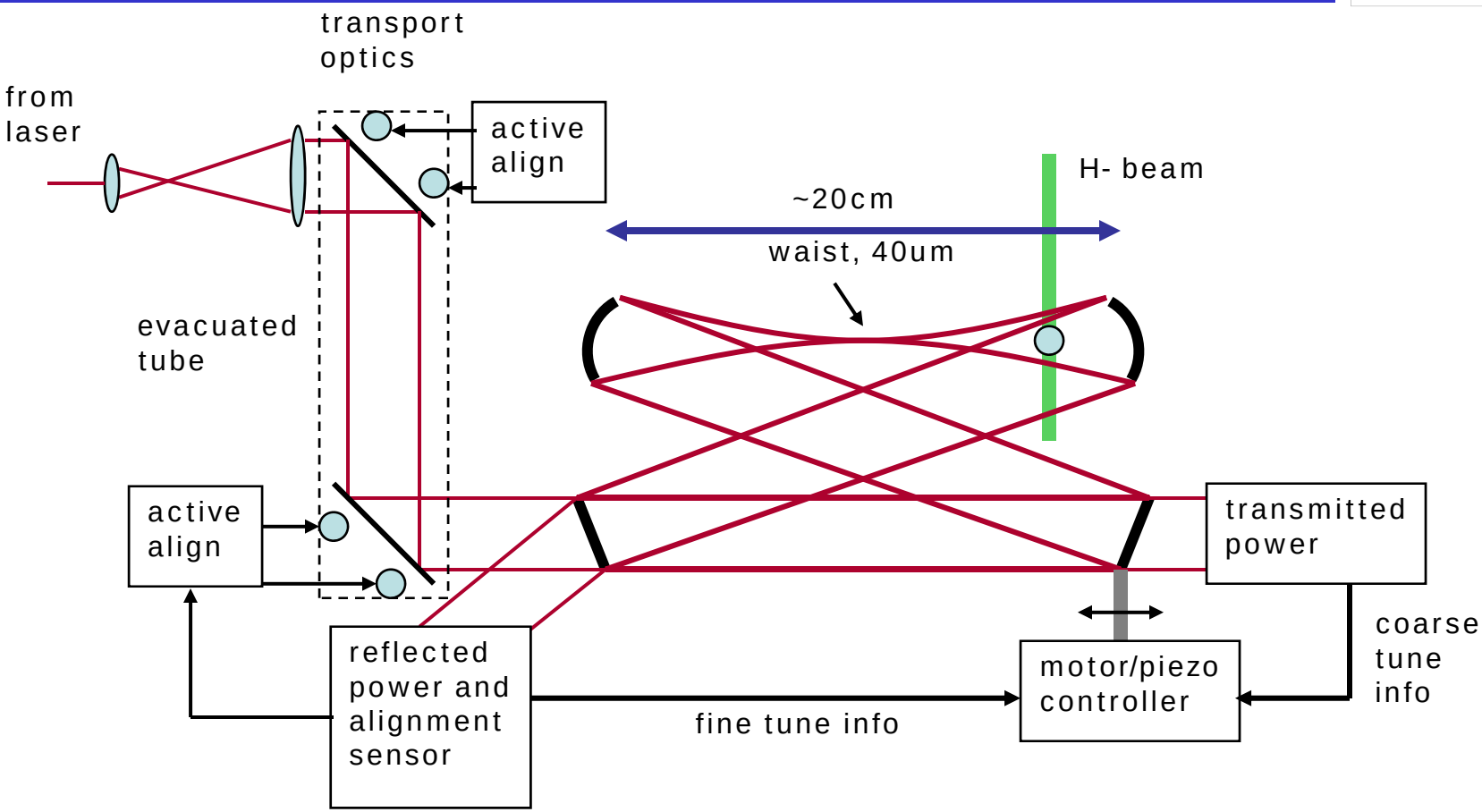

Four-mirror cavity:
Round-trip time relatively independent of focal spot size
Cavity length is actively tuned to stay on optical resonance
Pulse length is long enough to not require stabilization of laser offset frequency