Control Room Accelerator Physics

Supplemental

Introduction to Control Theory II

Outline

1. The big picture
   1. Definition
   2. Context

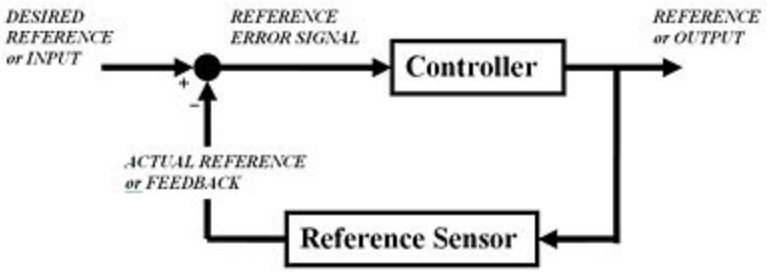

2. Software process

3. Accelerators and software engineering

4. Application frameworks

Classic "Control"

Output Stabilization /Disturbance Rejection

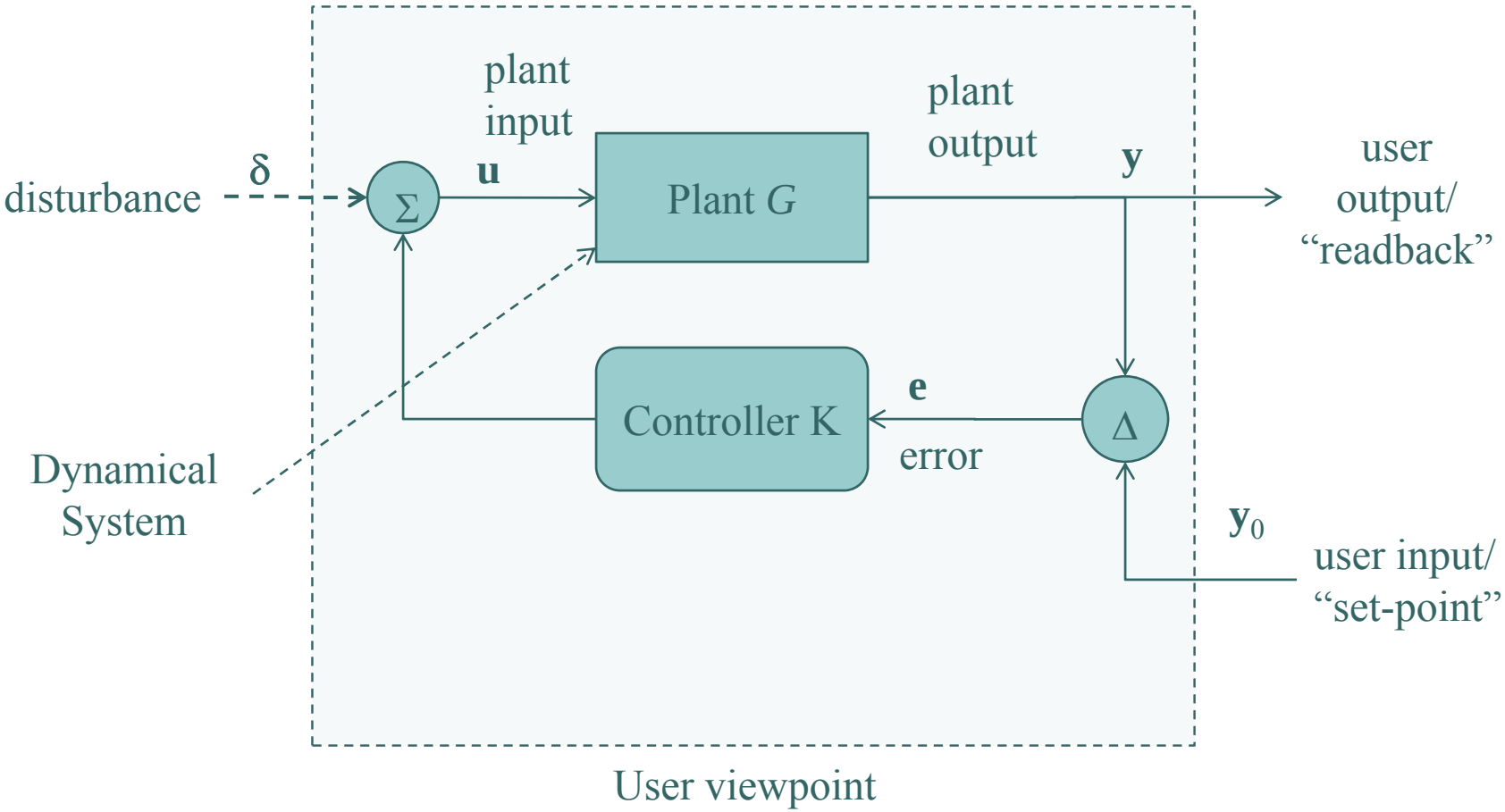

Basic Control Concepts

- Controllability
- Observability
- Stability

Controllability

A plant G is *controllable* if given an arbitrary state $\mathbf{x}_{tar} = (x_1, x_2, \ldots, x_n)$ in $\mathbb{R}^n$, is there a control $\mathbf{u}(\cdot)$ such that

$$\mathbf{x}(t; \mathbf{u}(t)) = \mathbf{x}_{tar} \text{ for some } t < \infty$$

where for LTI system

$$\dot{\mathbf{x}}(t) = \mathbf{A}\mathbf{x}(t) + \mathbf{B}\mathbf{u}(t)$$

$$\mathbf{x}(0) = \mathbf{0}$$

this means Rng $\mathbf{B} \cap$ Ker $\mathbf{A} = \varnothing$

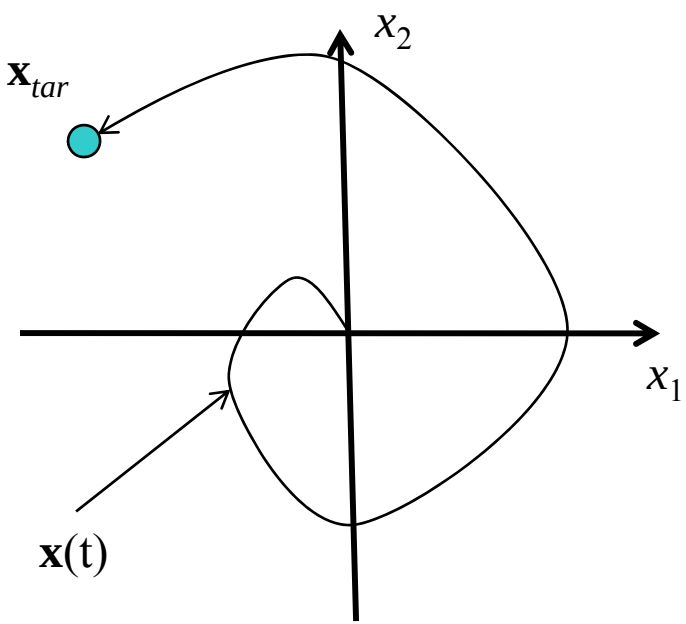

Observability

A plant is *observable* if we can estimate its internal state $\mathbf{x}(t)$ to arbitrary accuracy by observing the output $\mathbf{y}(t)$ for any $\mathbf{u}(\cdot)$ for $t < \infty$

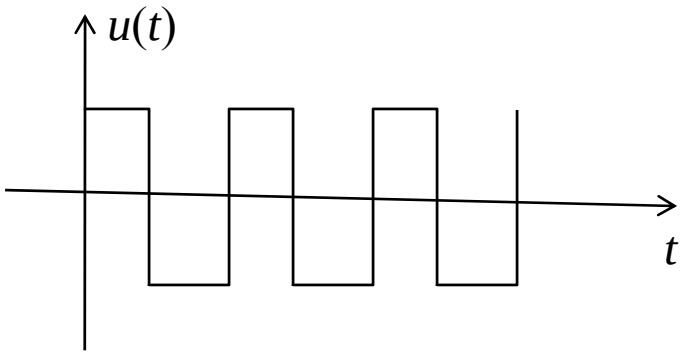

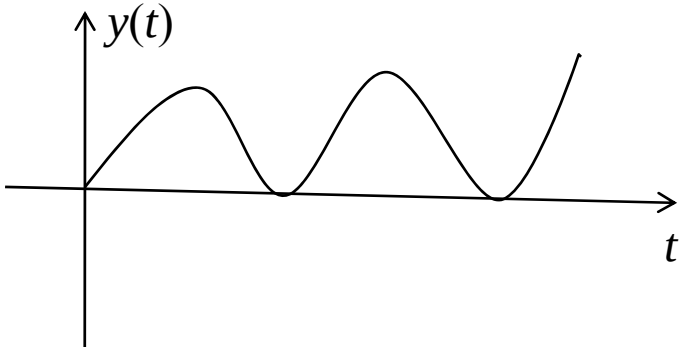

- Controllability and Observability are mathematical *duals*

For LTI Systems

- Controllability implies that the augmented matrix

$$\begin{pmatrix} \mathbf{B} & \mathbf{AB} & \mathbf{A}^2\mathbf{B} & \cdots & \mathbf{A}^{n-1}\mathbf{B} \end{pmatrix}$$

is of full (row) rank.

- Observability implies that the augmented matrix

$$O \equiv \begin{pmatrix} \mathbf{C} \\ \mathbf{CA} \\ \mathbf{CA}^2 \\ \vdots \\ \mathbf{CA}^{n-1} \end{pmatrix}$$

is of full (column) rank

Stability

Let $M \subset \mathbb{R}^n$, then the *basin of attraction* for M is the set

$$A(M) \equiv \left\{ \mathbf{x}_0 \in \mathbb{R}^n \,\middle|\, \mathbf{x}(0) = \mathbf{x}_0,\ \lim_{t \to \infty} \mathbf{x}(t) \in M \right\} \cup M$$

Stability

Say for a particular pair ($\mathbf{x}_0$, $\mathbf{u}_0$) we have

$$\mathbf{y}[t;\mathbf{x}_0,\mathbf{u}_0] = \mathbf{0}$$

(i.e., the output $\mathbf{y}$ for the given input $\mathbf{u}_0$ and at the internal state $\mathbf{x}_0$ is zero)

Then ($\mathbf{x}_0$, $\mathbf{u}_0$) is known as an *equilibrium point* for the plant G.

Eg., accelerator operating points

($\mathbf{x}_0$, $\mathbf{u}_0$) is *stable* if for any $\varepsilon > 0$ there exists a $\delta(\varepsilon)$ such that

$$\|\mathbf{u}_0 + \delta\mathbf{u}\| < \delta(\varepsilon, t_1) \Rightarrow \|\mathbf{y}(t)\| < \varepsilon \quad \forall\, t > t_1$$

for any perturbation $\delta\mathbf{u}$ at t_1.

($\mathbf{x}_0$, $\mathbf{u}_0$) is *asymptotically stable* if for any $\varepsilon > 0$ there exists a δ such that

$$\|\mathbf{u}_0 + \delta\mathbf{u}\| < \delta(\varepsilon) \Rightarrow \|\mathbf{y}(t)\| < \varepsilon \quad \forall\, t > 0$$

for any perturbation $\delta\mathbf{u}$ at t_1

Stability: LTI Systems

- Stability implies

$$\operatorname{Re}\lambda_i(\mathbf{A}) \le 0 \quad i = 1,\ldots,n$$

- Asymptotic stability

$$\operatorname{Re}\lambda_i(\mathbf{A}) < 0 \quad i = 1,\ldots,n$$

Conditions on **A** only!

For time-varying and nonlinear systems the situation is much more complicated

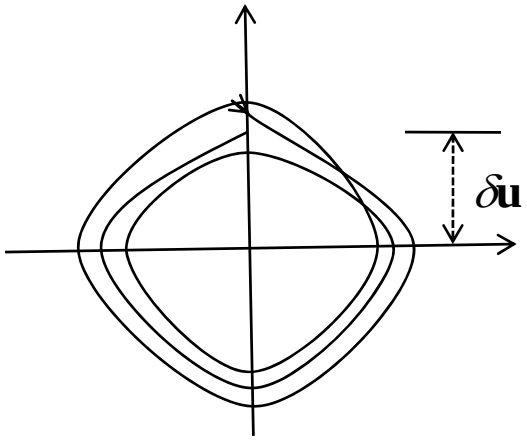

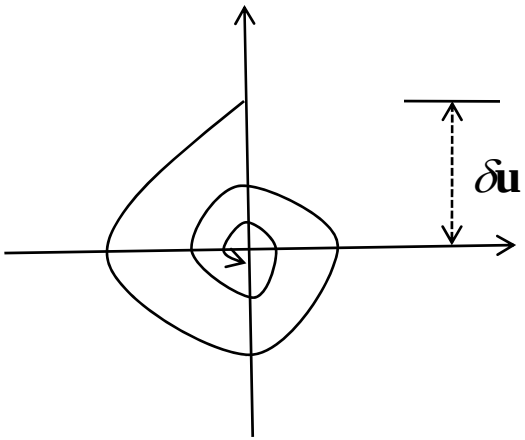

Stability: A Note

- Stability and maneuverability are opposites
  - An unstable system may be quickly moved to a different state
  - A stable system resists abrupt changes in state
- Most modern fighter planes are fly-by-wire
  - They are so unstable that a human pilot would quickly fatigue
  - Computer manages continual corrections and decouples controller motion.

Output Stabilization

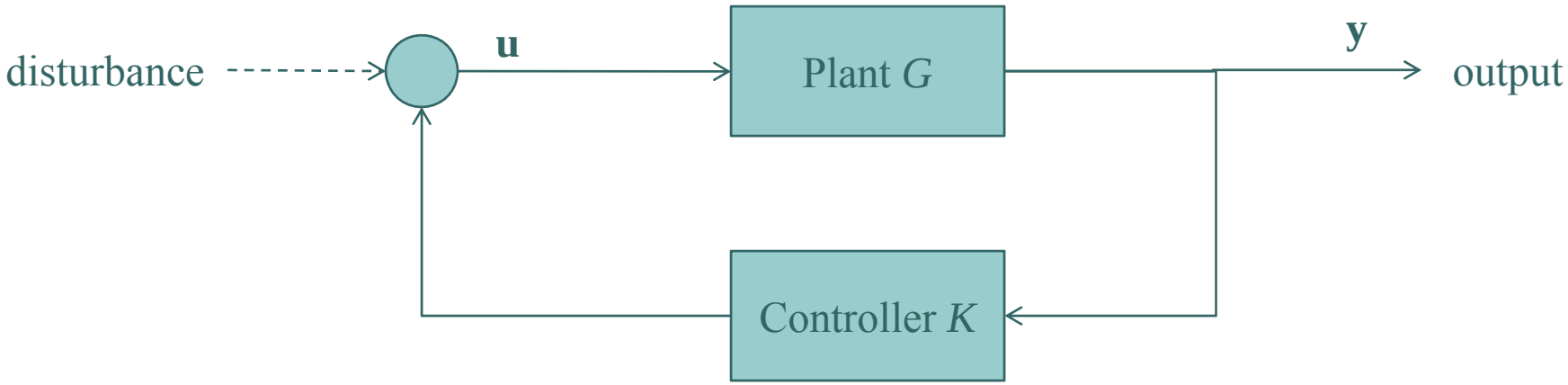

Observers (Passive)

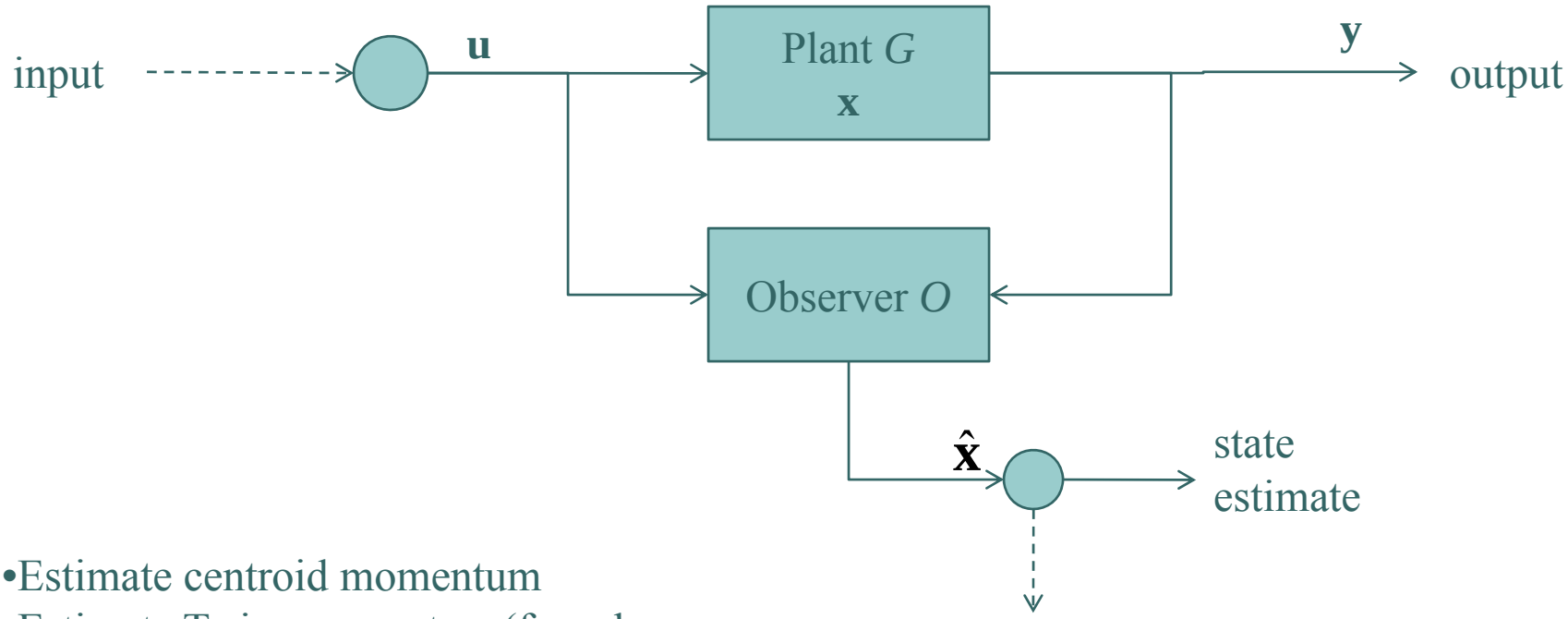

- Estimate centroid momentum
- Estimate Twiss parameters (from beam size and magnet drive)

Optimal Control

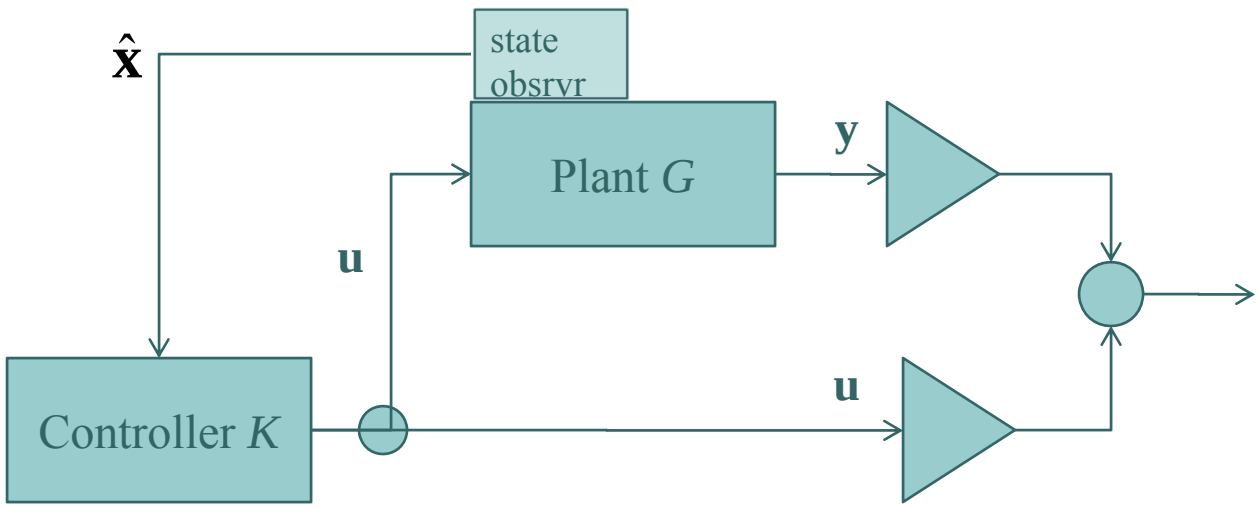

$$\min_t \int_0^t J[\mathbf{u}(\tau), \mathbf{y}(\tau)]\, d\tau$$

Minimum time interceptors
Minimal fuel rendezvous
Maximum profit restructuring

Optimal control problems have a natural symplectic structure, generalizing those of mechanics in the Hamilton-Jacobi-Bellman equations

Optimizer
(Persistent excitation)

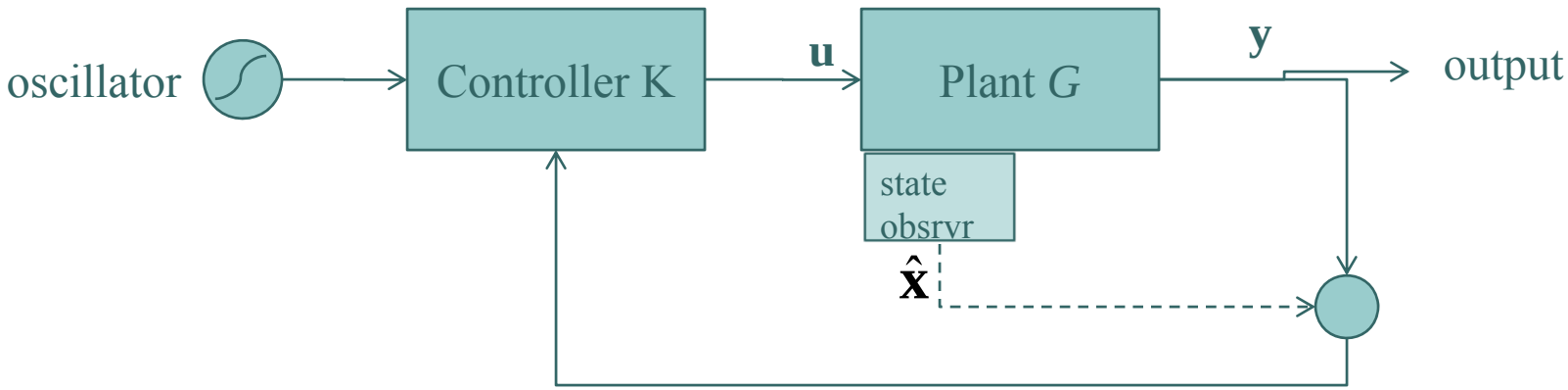

$J\left(\hat{\mathbf{x}}(t), \mathbf{y}(t)\right)$ Instantaneous objective

Anti-lock brakes
Maximizing fuel rates
(Manual) beam-based alignment
(Manual) response matrix calculations

Model Reference Control

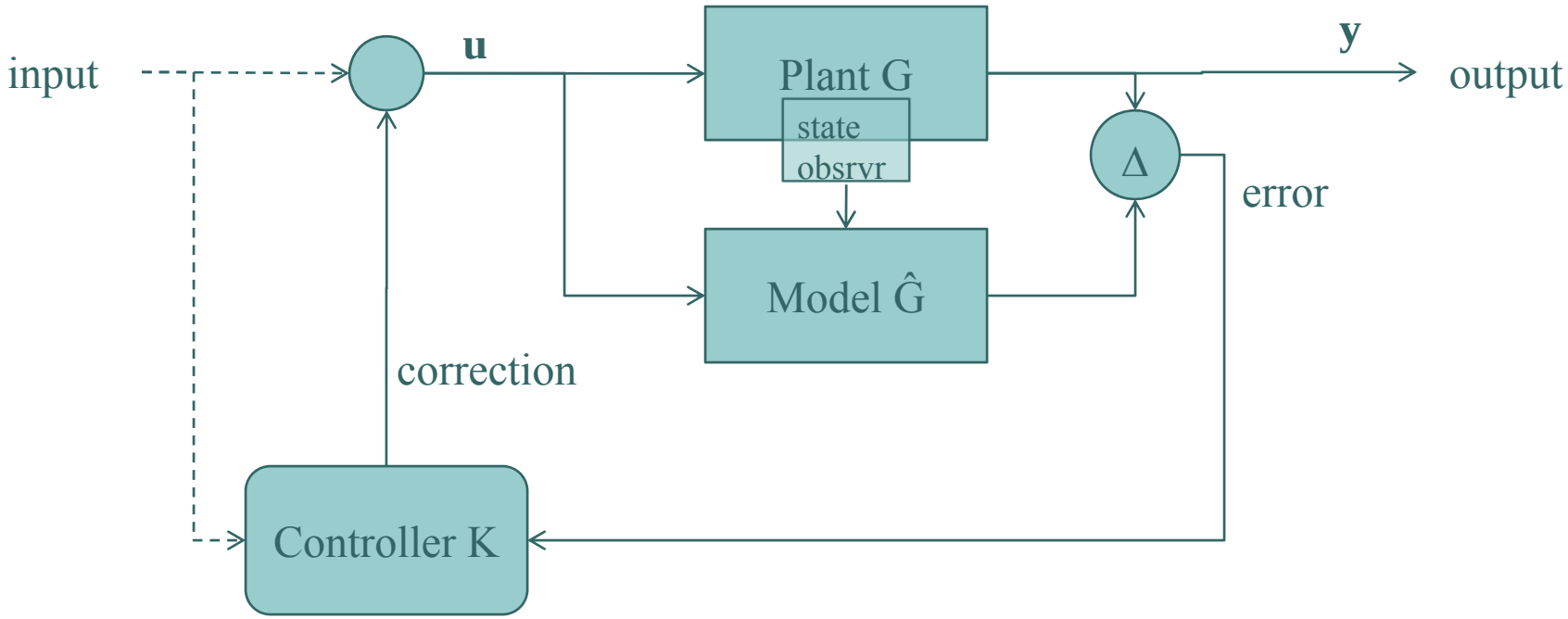

Adaptive Controllers

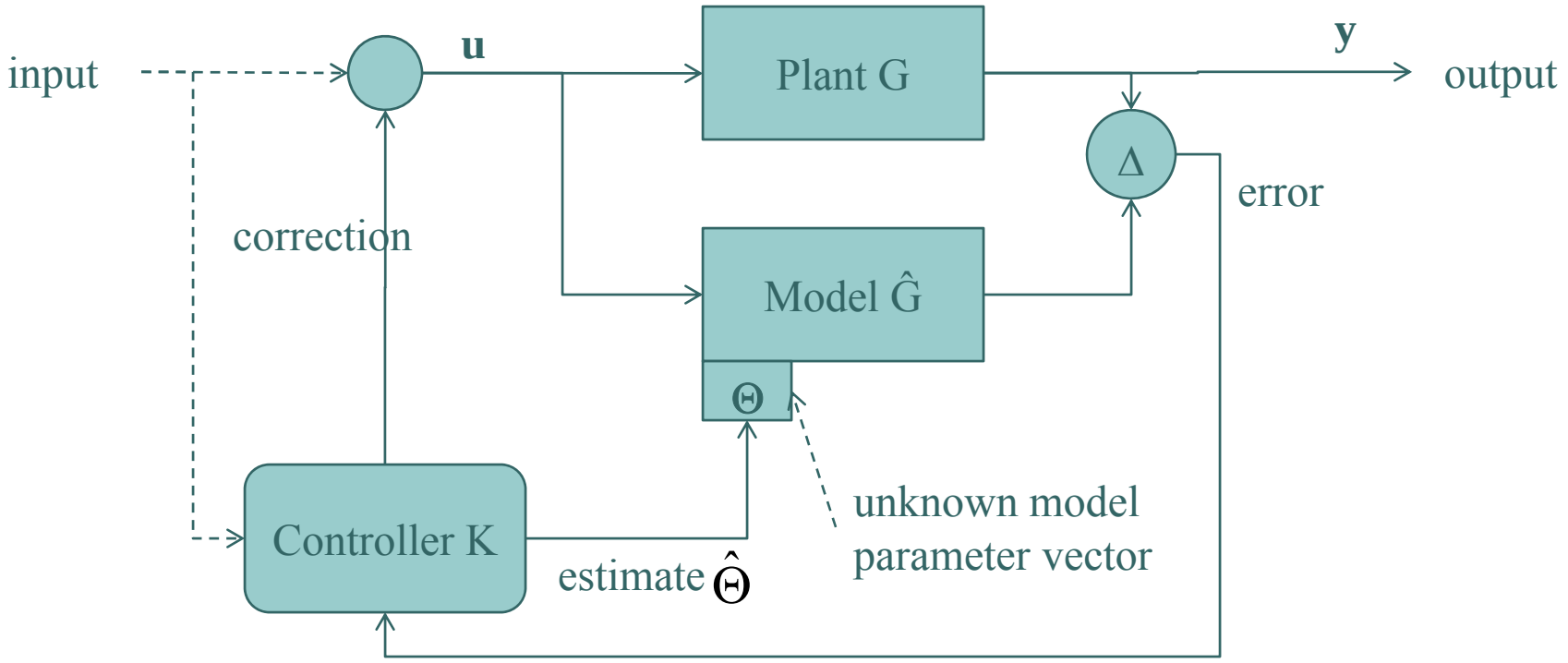

(Passive) Phase Coordinate State Observer
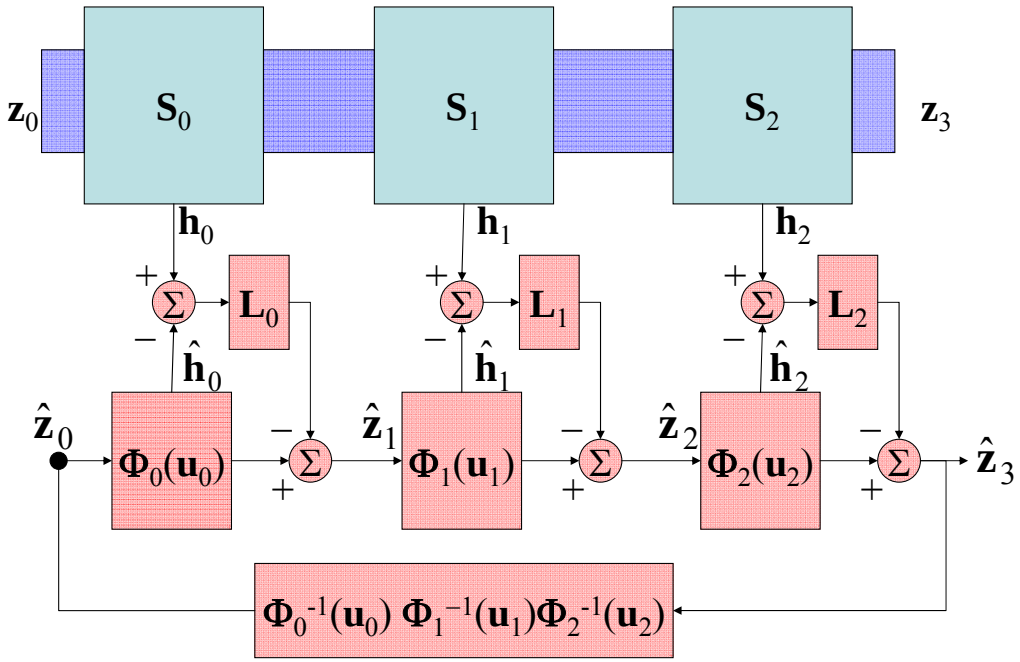
(using BPMs)